VINY®

# WALL AND CORNER PROTECTION AND ARCHITECTURAL SYSTEMS

www.arfen.com

entrance mat systems

**aluminium & PVC skirtings**

decoration profiles

**wall & corner protection systems**

for information

ARFEN®

ARFEN

Since the day it was founded, ARFEN has been producing solutions in high quality standards to meet construction and industrial sectors demand, and has achieved significantsuccess with its business partners not only in domestic markets but also in international markets. To be able to reach this success, our motto strictly have been " Continues in quality and customer focused approach". Arfen continues its activities in 25.000 m2 closed area in İstanbul Hadımköy Industrial area, Çorlu Organized Industrial area and Gebze Organized Industrial area. It has become one of the most significant and greatest manufacturer in plastic, alu minum and rubber industry with a management approach that has adopted the principle of specialization in manufacturing. While Arfen applies modern production systems, it also providessensitivity to work safety, human health and environment. Arfen fulfills the need of construction industry with its dilatation profiles, Arfen Bridge expansion profiles and bearings, Arfen d ecoration profiles, Viny wall and corner protection systems, Aluminum matting systems and Hydroflex & chamfer bands. Moreover, having available high machinery and equipment capacity, Arfen meets the specific product requirements of different sectors. As a result of working in numerous projects without any problems, Arfen has gained a Global market network coverage in m ore than 50 countries in the construction industry. Arfen's perfection and excellence in production quality is provided by its hard working and honest employees from lowest levels to top managers. After 20 years of working with an understanding of business and ethics, we would like to thank our employees, our customers and suppliers for their contributions.

Arfen Construction Company / İSTANBUL

Arfen Aluminium Company / TEKİRDAĞ

Arfen Bridge and Building Technology Company / İZMİT

## ADVANTAGES

- Our products certified by ce and under quality classifications of ISO 9001:2008
- Our products have VOC test report which is not included harmful gas to human nature
- Our materials do not contain heavy metals, according that the materials are not harmful and due to that they have ROHS certified.
- Our materials are antibacterial. we have test report by TÜBITAK.
- We have impact test reoprt and fire classification of B1.
- Impact strength has reported by Yıldız Technical Universty with high values.
- Environmental effects considered by ÇED certification.
- Our end caps made by "Polyamide 6" instead of "ABS" and it has 4-5 times more than impact resistance and not fragile as "ABS".
- Impact absorber TPE inserts have resistance to all weather conditions and have TSE document.
- All raw materials (plastic, aluminium) used for our manufacturing process are all recyclable.

VINY®

# COLOUR OPTIONS

Note: Colors are printing colors.
For color selection, please ask for a color chart.

20- WHITE

21- OFF WHITE

23-IVORY CREAM


24- WHEAT

25- SAND BEIGE


26- CAPPUCINO

28- LIGHT BROWN

29- BEIGE

30- CINNAMON

32- MOCHA


39- PEARL GREY


40- POLISHED GREY


41- LIGHT GREY

42- DARK GREY

43- ANTHRACITE GREY


48- MIMOSA


49- YELLOW

50- HARDAL

51- MANDARIN

52- CORAL

53- ROSE BUFF

54- BRONZE

58- RED

59- BORDEAUX

70- LIGHT GREEN

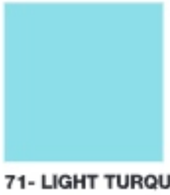
71- LIGHT TURQUOISE

72- DARK TURQUOISE

74- PISTACHIO GREEN

75- DARK GREEN

80- ICE BLUE

81- LIGHT BLUE

82- LILAC

83- BLUE

84- SKY BLUE

85- DARK BLUE

VINY®

# CONTENTS


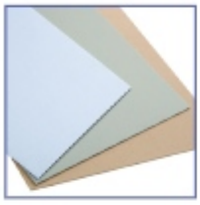

## VINYL PLATE SYSTEMS

They are antibacterial wall protection sheets and tapes that protect the impact area in operating rooms, cold rooms, narrow corridors and service corridors, reducing paint and maintenance costs.

PAGE 05-10

## HANDRAIL AND WALL PROTECTION

They are wall protection with their handrail form that are used in structures such as hospitals, nursing homes and clinics to protect people against accidents and falls.

PAGE 11-16

## HANDRAIL SYSTEMS

It is used for holding in school, hotel, hospital corridors and common areas. At the same time, it is used for holding purposes in disabled rooms and wet areas.

PAGE 17-24

## CRASH RAIL SYSTEMS

They are vinyl protective systems on aluminum used to reduce maintenance and repair costs, and to protect people and places against impacts with their shock absorbing structure.

PAGE 25-34

## CORNER PROTECTION SYSTEMS

They are vinyl over aluminum or adhesive vinyl corner protection systems used to protect the corners of walls and columns and those that hit areas in all kinds of structures and to absorb impacts.

PAGE 35-38

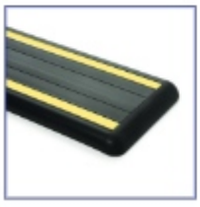

## RUBBER & TPE WALL AND CORNER PROTECTION SYSTEMS

They are rubber or TPE based wall and corner protection systems that do not absorb impacts in all kinds of parking structures and service corridors, loading and unloading areas.

PAGE 40-46

## STAINLESS STEEL PROTECTION SYSTEMS

They are wall and corner protection bands and handrail systems of various types and sizes, made of 304 or 316 quality stainless according to the nameplate.

PAGE 47-51

ARFEN

# CONTENTS

## STANDARD ENTRANCE MAT SYSTEMS
They are indoor and outdoor matting systems with 22 mm height carpet, rubber, brush, scraper top surface.

PAGE 53-57

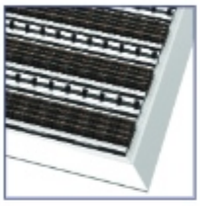

## THIN SERIES ENTRANCE MAT SYSTEMS
They are also indoor and outdoor matting systems with 12 mm high carpet, rubber, brush, scraper top surface.

PAGE 58-65

## ALUMINUM AND PVC SKIRTINGS
They are decorative and functional aluminum and PVC skirting details from 50 mm to 150 mm.

PAGE 66-74

## STAIR NOSE PROFILES
They are stair nosing profiles in various sizes produced from aluminum, PVC and non-slip tapes.

PAGE 75-77

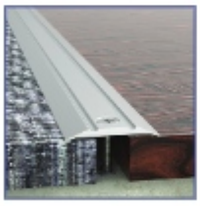

## TRANSITION, LEVEL DIFFERENCE, CARPET AND PARQUET FINISH PROFILES
They are used at the points where the finishing and interlacing of various floor coverings such as parquet, ceramic, granite, marble, carpet are required.

PAGE 78-79

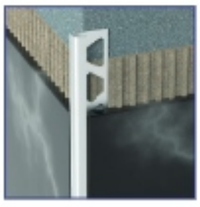

## CERAMIC, MARBLE, GRANITE, CORNER AND FINISH PROFILES
Bathtub edge and border Profiles
Terrazzo finish profiles
Drywall end-start profiles

PAGE 80-82

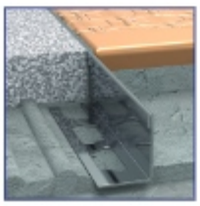

## STAINLESS STEEL PROFILES
It covers the stainless models of ceramic inner and outer corner, skirting and corner protection profiles.

PAGE 83-84

# Antibacterial Decorative Wall Protection Panels

**LESS PAINTING** **LESS MAINTENANCE** **LESS COST IN 4 YEARS**

Anti bacterial vinyl sheets produced according to prevent wear and tear on walls and door surfaces indoors, against scratches and bumps with 32 colour options.
You can beautify your places with our presented models with decorative pictures. This increases the use in various places.

Beacuse of the antibacterial future; specially used in health and education sectors, as breif; all hygienic and sterile environment that can be applied very easy by
adhesive wall coverings according to Bs2d0 fire classification (EN13501) selected for lot of projects.

Produced as 0,8 mm - 3 mm thickness with special pattern and foil covered vinyl plates; has end caps such as upper cover part, middle connection part, internal and external corner parts.In this way, the expansion that may occur due to heat change It provides ease of assembly by reducing the problems in cases of shrinkage and shrinkage. Also, optionally between the platesIt is also possible to apply silicone sealant in its own color.

Thanks to special cuts and picture prints, Although the usage areas are very wide, it is used in schools, hospitals, in hotels, shopping malls, kindergartens, airport terminal buildings, in all sterile and hygienic corridors,It is used intensively in the service traffic corridors.

Vinyl wall panels are cleanable and aesthetic properties, as well as reducing maintenance and repair costs. It has a contemporary texture and structure that is more preferred than other alternative wall protection products.

# EDUCATIONAL AND **DECORATIVE WALL PLATES**

### Space Explorer

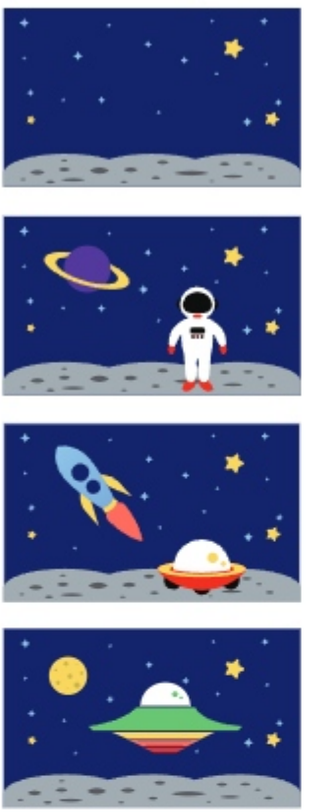

### Green Garden

### Blue Sky

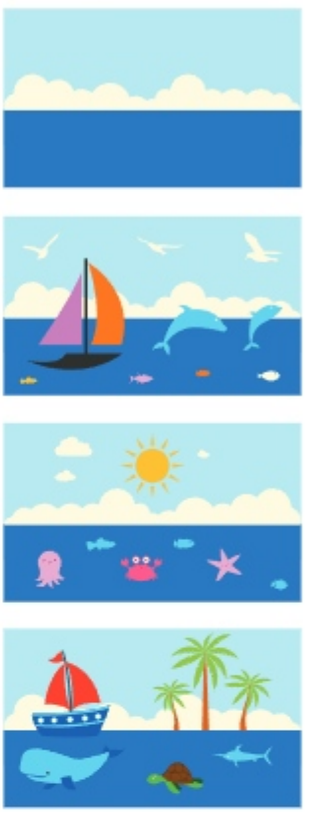

### Let's Learn the Traffic Rules

### Go to Bed Early Wake Up Early

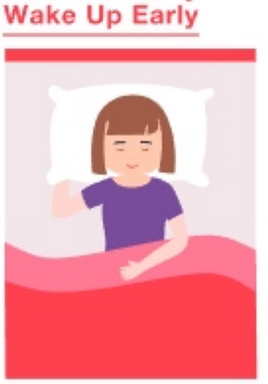

### Throw the Garbage in the Trash Bin

### I Wash My Hands Often

### I Always Get On Well With My Friends

### I Always Say Hi

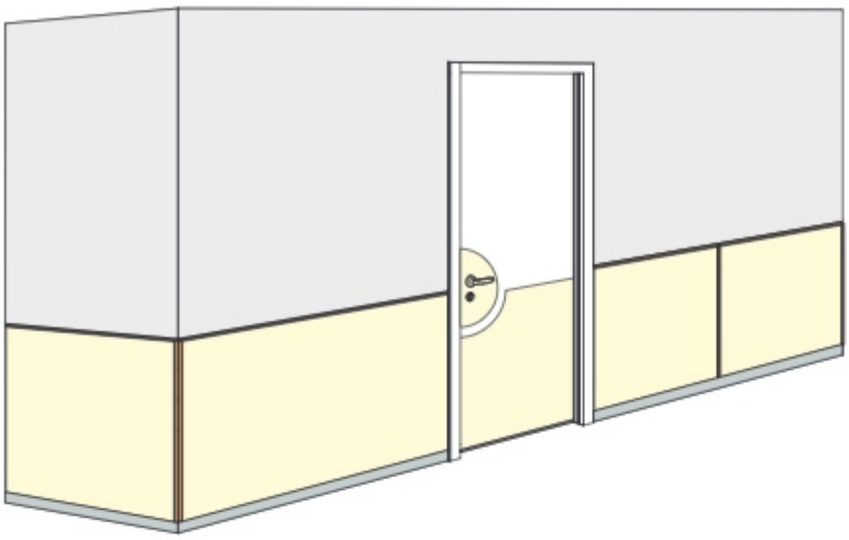

# WG1004

## ARFEN VINYL PLATES

**VINYL PLATE DIMENSIONS**

| Width | Height | t1(mm) | t2 (mm) | t3 (mm) |
|---|---|---|---|---|
| 1000 | 2000 | 1 | 1,5 | 2 |
| 1000 | 3000 | 1 | 1,5 | 2 |
| 1200 | 2400 | 1 | 1,5 | 2 |
| 1200 | 3000 | 1 | 1,5 | 2 |
| 1250 | 2500 | 1 | 1,5 | 2 |
| 1250 | 3000 | 1 | 1,5 | 2 |

Unless otherwise stated, our standard production is 1000x3000x1,5 mm

*According to the calculations, in case of repairing the paint every 2 years vinyl plate system pays for it self in 4 years*

WG 1004 vinyl sheet is produced in 1 mm, 1.5 mm and 2 mm thicknesses and in 1000 mm, 1200 mm, 1250 mm widths and various lengths. They are decorative sheets that are adhered to the walls with special adhesives and protect your walls from scratches. Easily cleanable and washable thanks to its structure, it meets the needs of a wide area from hospitals to production areas. As it is produced in different colors, the vinyl plates are suitable with the other construction materials. 1.5 mm is produced as standard. Others can be produced according to order quantity.

## OPTIONAL ACCESSORIES

UPPER COVER WG1004-1

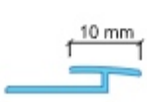


CONNECTION PART WG1004-2

INTERNALEND CAP WG1004-3

EXTERNAL END CAP WG 1004-4

# VINYL PLATES
## ASSEMBLY PARTS

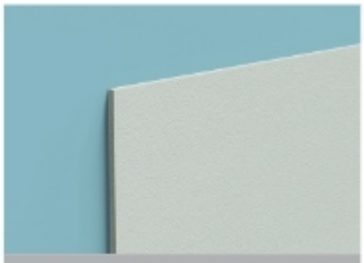
1- WG1004 Vinyl Plate

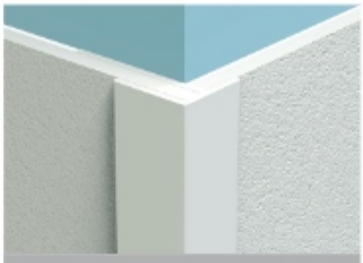
2- WG1004-4 External Corner Parts

3- WG1004-1 Top Closure

4- WG1004-2 Connecting Parts

5- WG1004-3 Internal Corner Parts

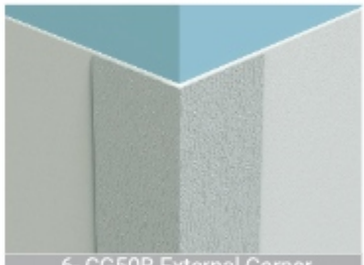
6- CG50B External Corner Protection Tape

7- PS100 Flexible PVC Skirting

PS3030 + WG1004-2 Connecting Parts

# WG154-204-304
## ARFEN VINYL PLATES

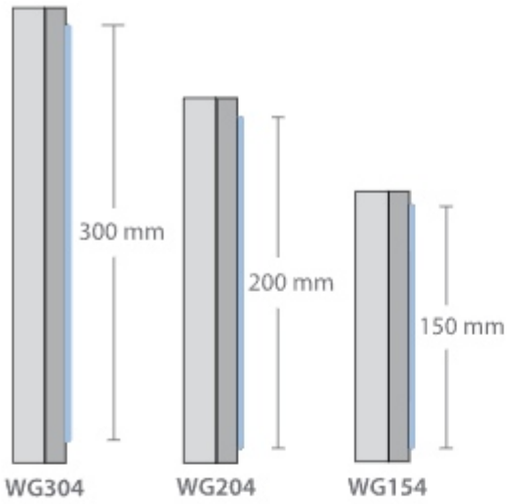


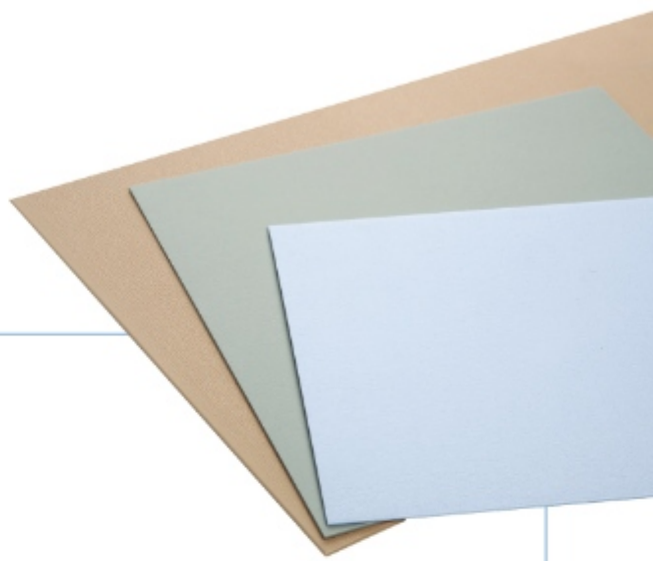

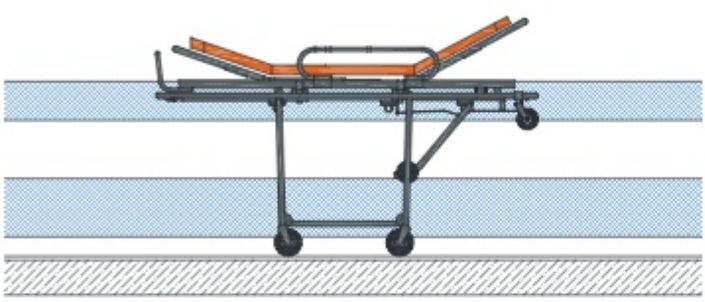

WG154 - 204 - 304 vinyl plates are 2 mm thick and 150 mm, 200 mm, 300 mm width. These decorative sheets protect yourw alls from scratches by sticking to walls and doors with special adhesives. It is decorative with its scratch-proof top patterned structure. Since it is produced in 32 different colors, it is applied in harmony with other building materials. Plate lengths are produced in 4 meters.

ROLLER BRUSH

VINYL BOND PLATE ADHESIVE

# DG SERIES

## VINYL DOOR KICK PLATE

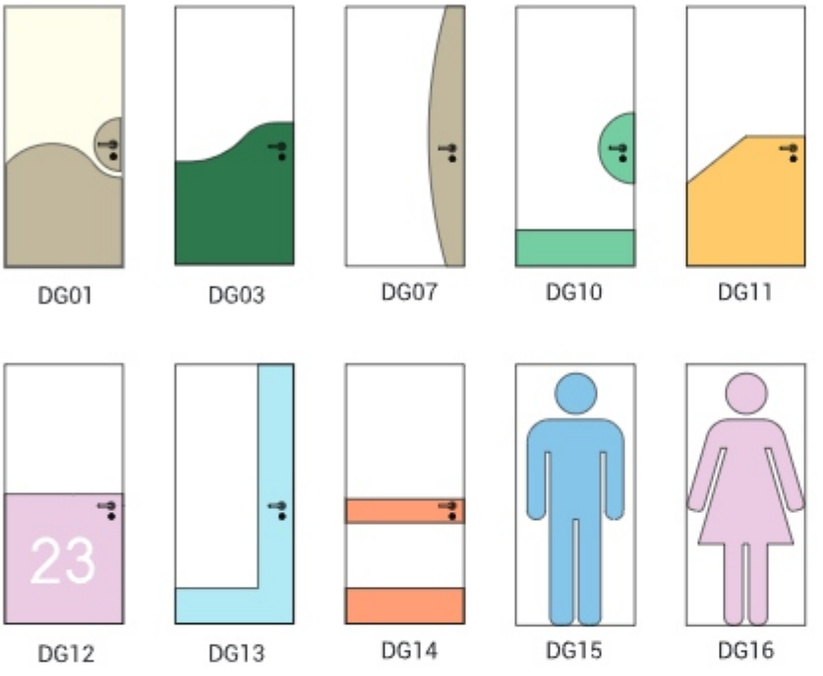


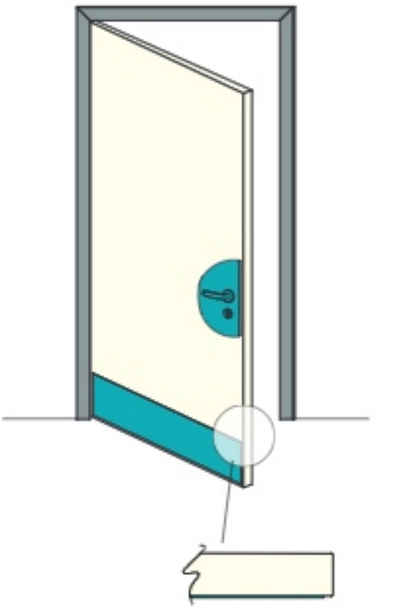

ARFEN Vinyl Door Kicking Plate has a special design in order to prevent doors from being damaged and also creating a decorative appearance. As the colors used are compatible with the wall and corner protection systems, an integrity is achieved. It is hygienic with its antibacterial structure and provides full protection. Production can be made in standard sizes and models, as well as alternatives can be developed on a project basis. Door protection plates, which are widely used, are especially suitable for hospitals, schools and commercial areas. Profile lengths are 4 meters and are produced in 32 different colors.

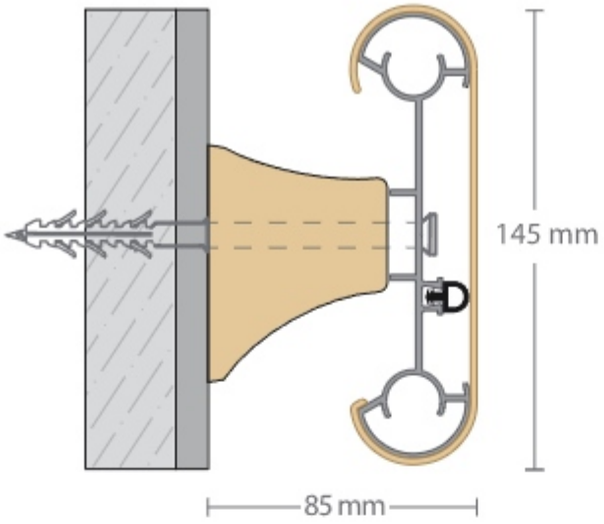


# WG145

## HANDRAIL WALL PROTECTION

WG145 wall protection band has 145 mm width, 85 mm depth with a hand grip structure, mounted on the wall with a continuous rear aluminum profile. It absorbs the impacts with the help of the bottom gasket. It is decorated with its scratch-proof top vinyl cover. It also create a perfect system due to the end caps that match with the vinyl top cover. It is connected to different walls with different fixing accessories by means of the wall brackets (WG005) with an interval of 60-75 cm. Profile lengths are 4 meters and are produced in 32 different colors.

WG 005
BRACKET

WG006
LEFT AND RIGHT END

WG007-1
INTERNAL CORNER

WG007-2
EXTERNAL CORNER

# WG145-1

## WALL PROTECTION HANDRAIL WITH LED

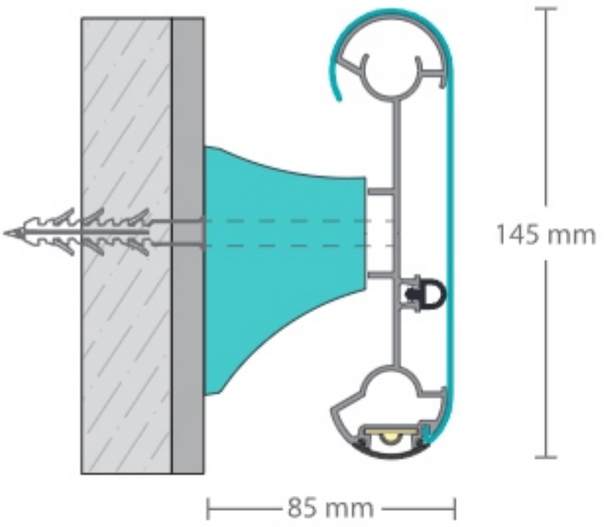

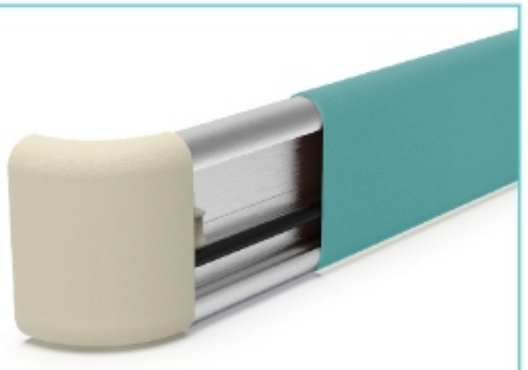

WG145-1 is LED illuminated handrail and wall protection with a width of 145 mm and a depth of 85 mm, mounted on the wall with a continuous aluminum profile. It absorbs the impacts due to the bottom rubber wicks. It is decorated with its scratch-proof top vinyl cover. It also create a perfect system with the end caps that look the same as the vinyl top cover. It is connected to different walls with different fixing accessories by means of the wall bracket (WG005) with an interval of 60-75 cm. Profile lengths are 4 meters and are produced in 32 different colors.

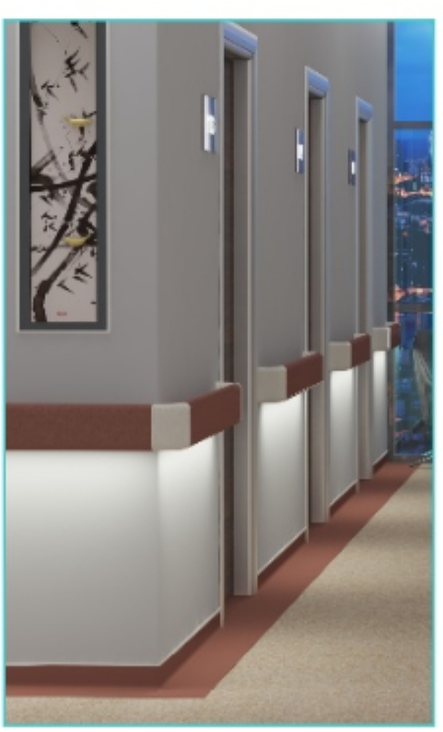

WG 005
BRACKET

WG006
LEFT AND RIGHT END

WG007-1
INTERNAL CORNER

WG007-2
EXTERNAL CORNER

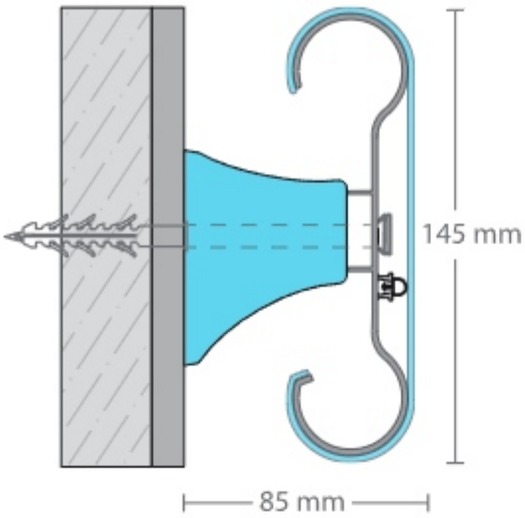


# WG146

## HANDRAIL WALL PROTECTION SYSTEM

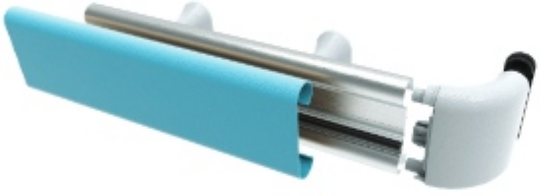

WG146 is a handrail and wall protection with a width of 145 mm and a depth of 85 mm, mounted on the wall with a continuous aluminum profile. It absorbs the impacts due to the bottom rubber wicks. It is decorated with its scratch-proof top vinyl cover. It creates a perfect system with the end caps that look the same as the vinyl top cover. It is also connected to different walls with different fixing accessories by means of the wall bracket (WG005) with an interval of 60-75 cm. Profile lengths are 4 meters and are produced in 32 different colors.

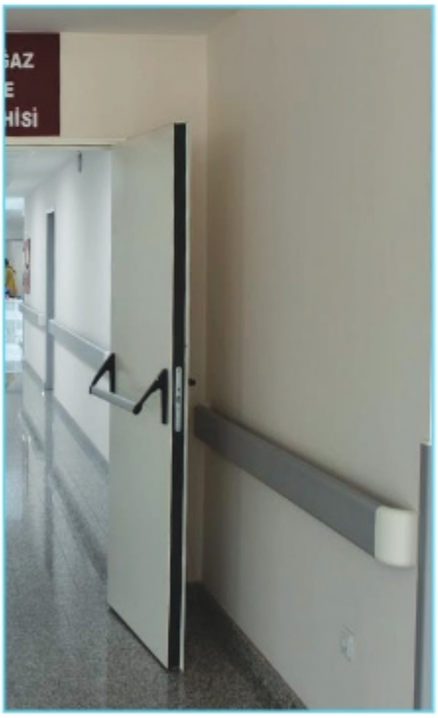

WG 005
BRACKET

WG006
LEFT AND RIGHT END

WG007-1
INTERNAL CORNER

WG007-2
EXTERNAL CORNER

# DC140

## HANDRAIL WALL PROTECTION

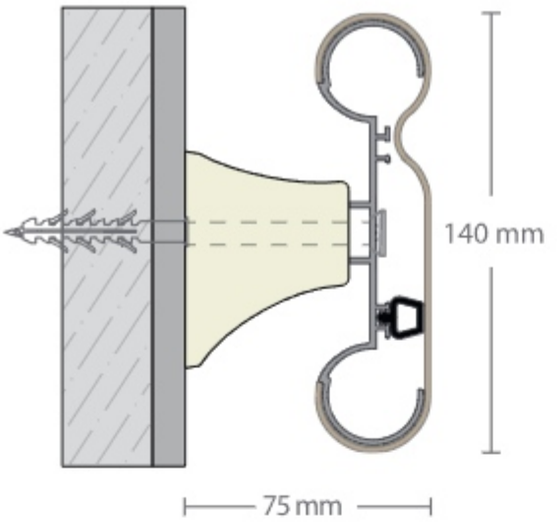


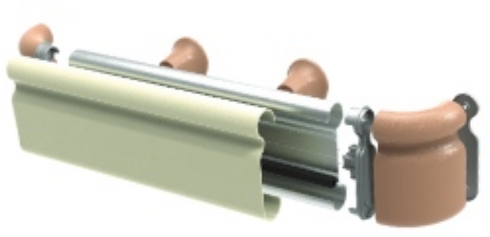

DC140 is a handrail and wall protection with a width of 140 mm and a depth of 75 mm, mounted on the wall with a continuous aluminum profile. It absorbs the impacts due to the bottom rubber wicks. It is decorated with its scratch-proof top vinyl cover. It creates a perfect system with the end caps that look the same as the vinyl top cover. It is also connected to different walls with different fixing accessories by means of the wall bracket (DC005) with an interval of 60-75 cm. Profile lengths are 4 meters and are produced in 32 different colors.

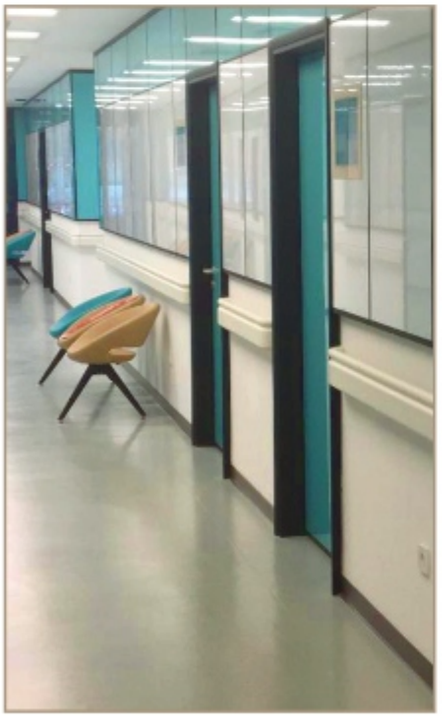

DC005 BRACKET

DC006-1 LEFT END

DC006-2 RIGHT END

DC007-1 INTERNAL CORNER

DC007-2 EXTERNAL CORNER

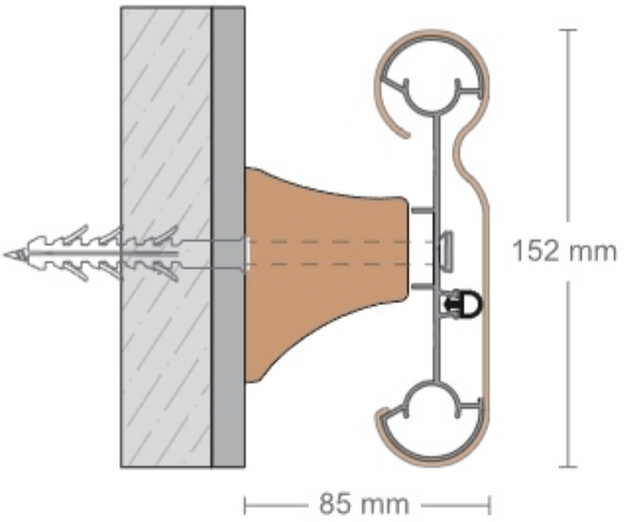


# WG152

## HANDRAIL WALL PROTECTION

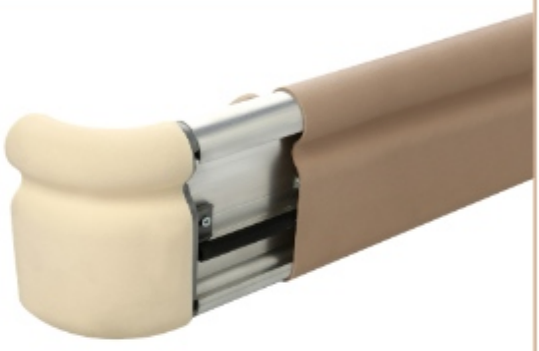

A decorative wall protection tape with a new handlebar structure, 152 mm (6 inches) wide and 85 mm deep. The continuous rear aluminium carrier profile is fixed to the wall by means of the grip elements used at 60-75 cm intervals. Wall protection with a scratch-resistant vinyl top cover system absorbs the impacts thanks to the lower styles and offers a contemporary solution with decorative end pieces. Its antibacterial and heavy metal-free unique formulation is ideal for use in healthcarefacilities such as hospitals, nursing homes and clinics. Profile lengths are 4 meters and are produced in 32 different colours.

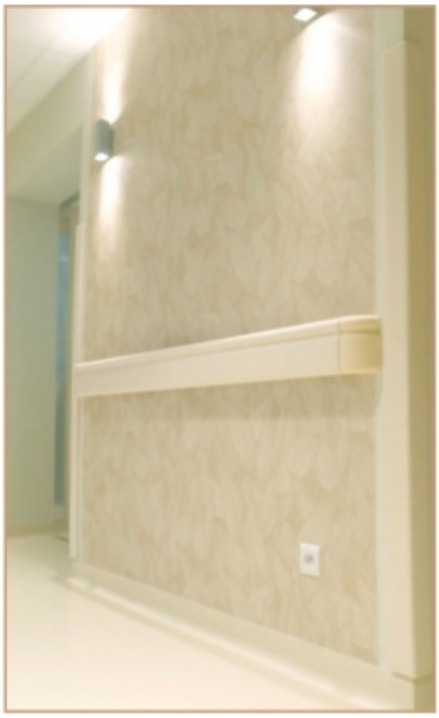

WG005 BRACKET

WG026 LEFT END

WG027 RIGHT END

WG028
OUTER CORNER

WG029
INSIDE CORNER

# WG152-1

## WALL PROTECTION WITH COMBO RAIL HANDLE

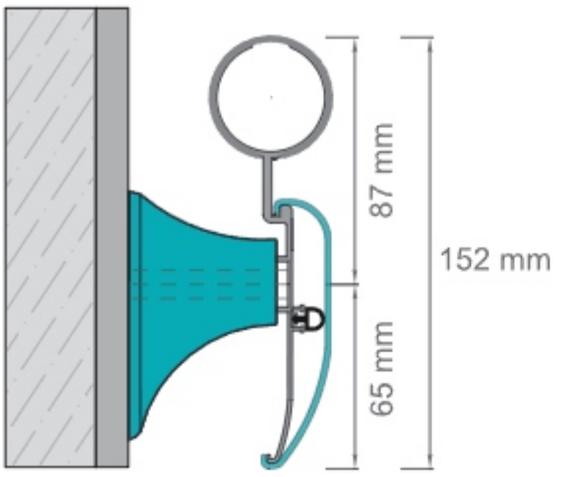


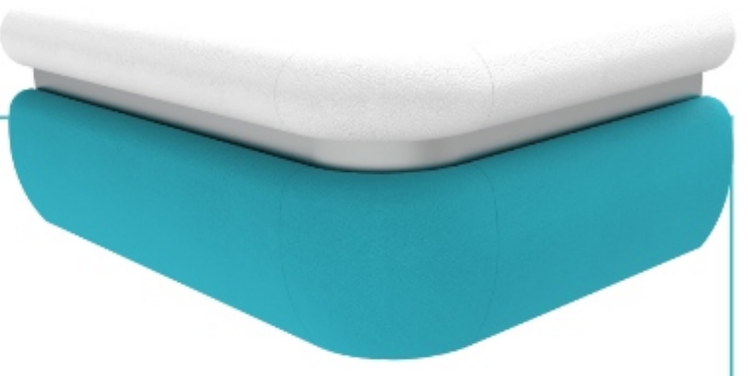

Arfen WG 152 combo rail is a system that completely changes the stainless strip or wood patterned strips applied to the middle part as well as allows the use of different colours of the wall protection band holding part and the lower body.

WG044 LEFT END

WG045 RIGHT END

DC 005 BRACKET

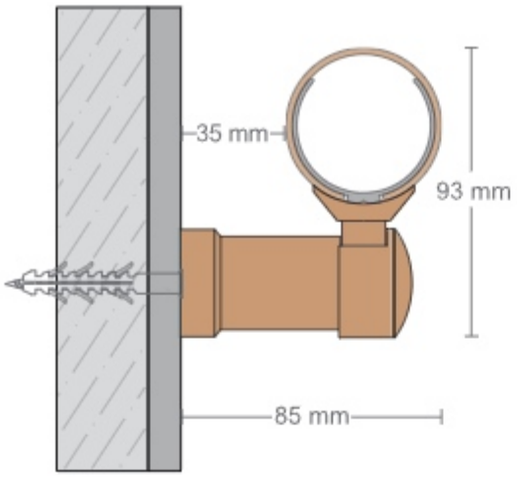


# WG50
## HANDRAIL SYSTEM

WG 50 is used sparingly in hospital corridors and common areas, stairwells. It can be used as a handrail system in buildings such as schools, hotels, shopping malls, business centres and residences due to its colour alternatives, warm decorative texture and end pieces that are not available in the handrail system. The profile lengths are 4 meters and are produced in 32 different colours.

WG010 BRACKET

WG011
HANDRAIL ELBOW

WG017
HANDRAIL RING

WG018
HANDRAIL PLUG

T.C.
Turkish Patent Institute
Patent Registration
Number
2007 03 639

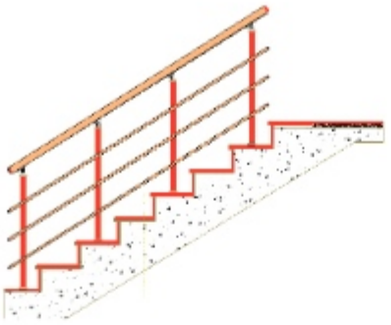

# WG50
## HANDRAIL SYSTEM



WG010 BRACKET

WG010-1 STAINLESS BRACKET

WG011 HANDRAIL ELBOW

WG11-2 WG50 HANDRAIL
INSIDE AND OUTER CORNER.

WG017 HANDRAIL RING

WG018 HANDRAIL PLUG

WGP18 18'LİK HORIZONTAL
CONNECTION PROFILE

WG019 40
SHAFT HEAD SPRING.

WG021 18°
OUTER PIPE SUPPORT

WG021-2 18°
INNER PIPE SUPPORT

WG50 50 mm
HANDRAIL PIPE

WG024 WG50 MIRROR

WG025 40
STRUT MIRROR

WG040 40'LIK
STITCH PROFILE

WG041 WG40
STRUT COVER

WG022 18°
PIPE PLUG

The WG50 Railing System is a patented railing system that offers colour alternatives that no other system provides for both stairwells and gallery spaces in turn structures. Due to its structural compatibility with other systems, it offers various usage options by using some accessories of stainless or aluminium. It is resistant to scratches and impacts with its internal aluminium carriers and vinyl cover. Profile lengths are 4 meters and they are produced in 32 different colours.

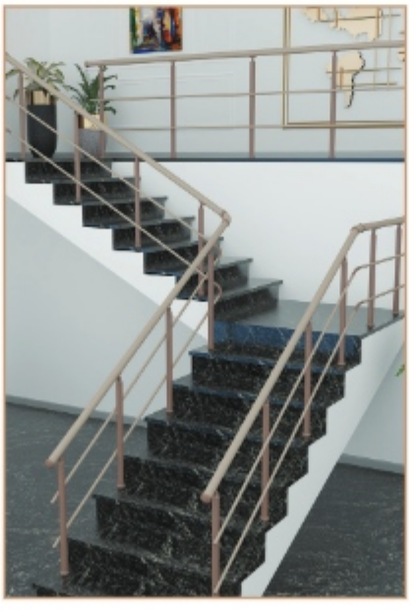

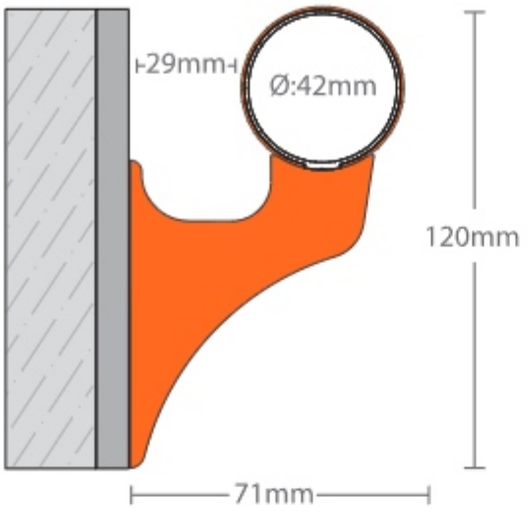


# WG42-1

## VINYL HANDRAIL SYSTEM

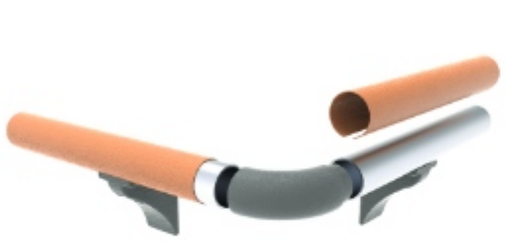

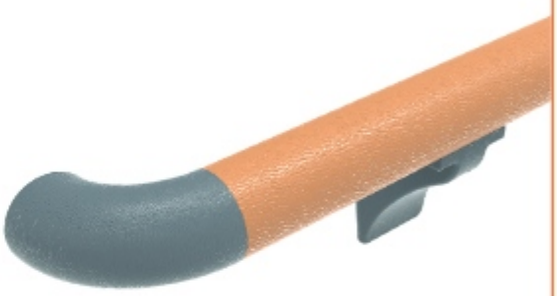

It is used in hospital corridors and common areas, and in stairwells, for holding purposes. It is economical due to the polyamide handle part. Profile lengths are 4 meters and they are produced in 32 different colours.

WG031 BRACKET

WG032
HANDRAIL ELBOW

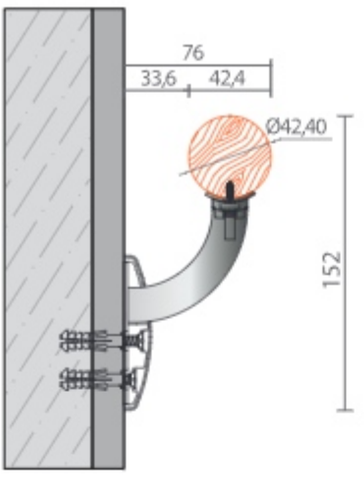


# WG42-2

## WOODEN HANDRAIL SYSTEM

WG 42-2 is used for holding in hospital corridors and common areas, stairwells. What makes the WG 42-2 handrail system different is that the main body is wooden and the turn fittings are stainless. Profile length: 4 meters.

WG039
STAINLESS BRACKET

WG068 SELF BRACELET
RIGHT LEFT END ELBOW

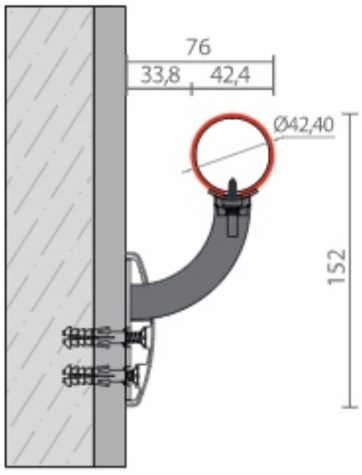


# WG42-3

## STAINLESS & VINYL HANDRAIL SYSTEM

WG42-3 It is used in hospital corridors and common areas, and in stairwells, for holding purposes. In addition, it can be used as a handrail system in buildings such as schools, hotels, shopping centres, business centres and residences due to its colour alternatives, warm decorative texture and finishing parts that are not available in any other handrail system. What makes the WG 42-3 handrail system different is that it provides an aesthetic appearance to the walls thanks to the fact that the turn connection parts are stainless. Profile lengths are 4 meters and they are produced in 32 different colours.

WG039
STAINLESS BRACKET

WG068 SELF BRACELET
RIGHT LEFT END ELBOW

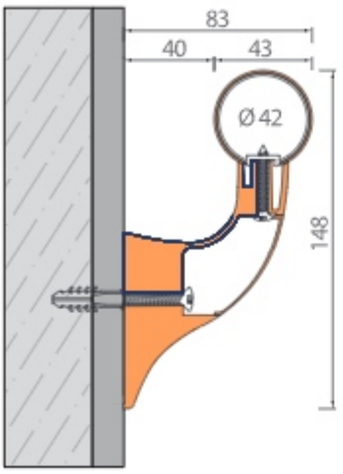


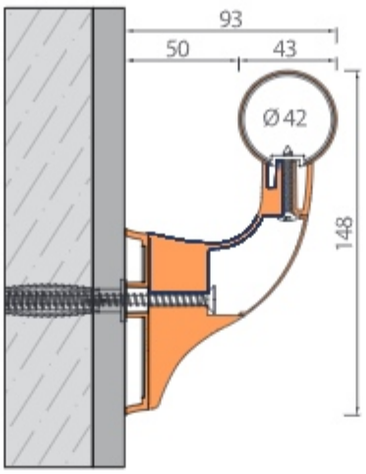


# WG42-4

## VINYL HANDRAIL SYSTEM

WG42-4 is used in hospital corridors and common areas, and in stairwells for holding purposes. It is a handrail system fixed 40mm away from the wall according to international standards. It is easy to assemble and it has a decorative and aesthetic look due to its plastic bracket. The profile lengths are 4 meters and they are produced in 32 different colours. It can be applied at a distance of 50 mm from the wall using the WG065 and WG066 apparatus.

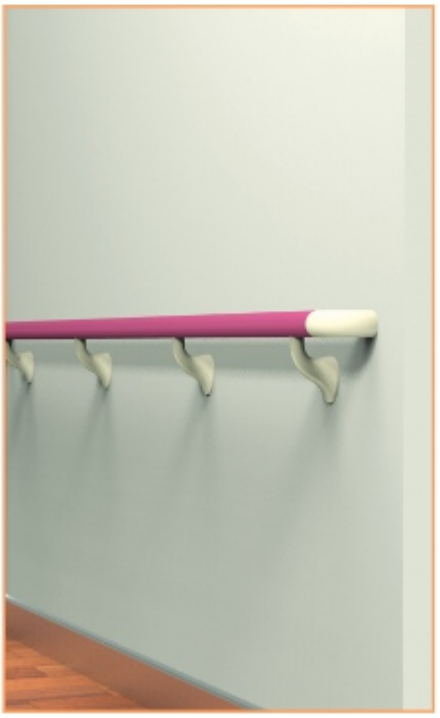

WG062
HANDRAIL BRACKET

WG063
HANDRAIL ELBOW

WG065
HANDRAIL RAISING APPARATUS

WG066
ELBOW RAISING APPARATUS

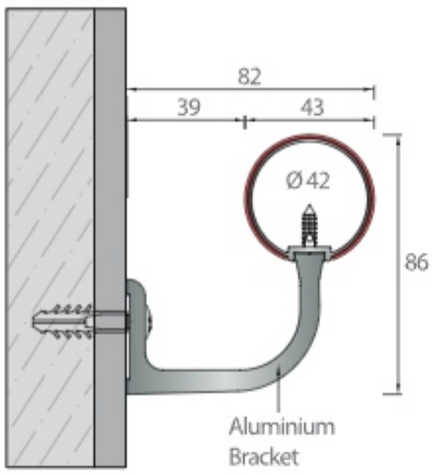


# WG42-5
## HANDRAIL SYSTEM

WG 42-5 is used for holding purposes in hospitals, offices and public buildings, corridors and stairwells. It is easy to assemble and also decorative due to its aluminium handle. Profile lengths are 4 meters and they are produced in 32 different colours.

WG063
HANDRAIL ELBOW

WG064 ALUMINIUM
HANDRAIL BRACKET

# www.arfen.com

www.wallguardsystems.com

www.duvarkoruma.com

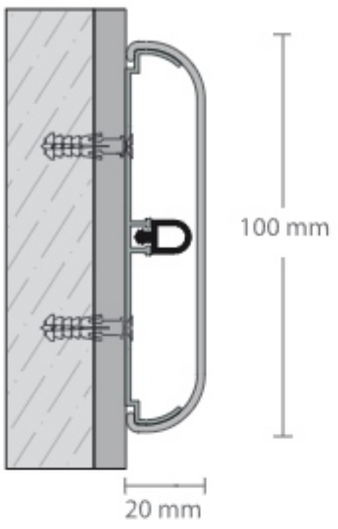


# WG100

## WALL PROTECTION CRASH RAIL

WG 100 is a wall protection tape that is mounted on the wall with a continuous aluminium profile with a width of 100 mm and a depth of 20 mm. It absorbs the impacts thanks to the bottom wick and is widely used as a chair back due to its narrow structure. It is especially common in doctor's rooms, waiting areas and classrooms. Produced in 32 different colours, the permit is applied in harmony with other building materials. Profile lengths are produced in 4 meters.

WG020
RIGHT AND LEFT END

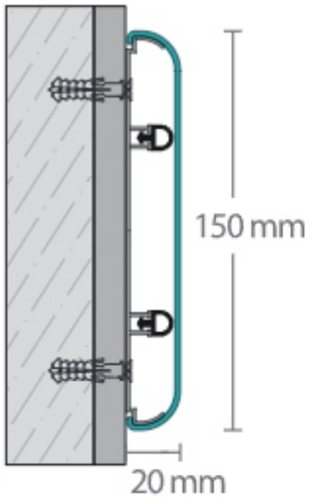


# WG150

## WALL PROTECTION CRASH RAIL

WG013
RIGHT AND LEFT END

WG014
OUTER CORNER

WG 150 is a wall protection tape that is mounted on the wall with a continuous aluminium profile with a width of 100 mm and a depth of 20 mm. It absorbs the impacts thanks to the bottom wick. They are used to protect the walls against impacts in areas where the use of wall protection tapes with hand grips is not appropriate, especially in corridors narrower than 2 meters. Profile lengths are produced in 4 meters.



# WG150-1

## WALL PROTECTION

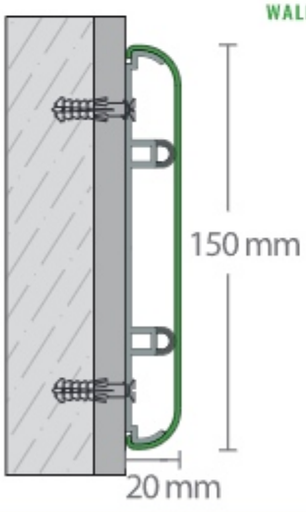


WG013-1
RIGHT AND LEFT END

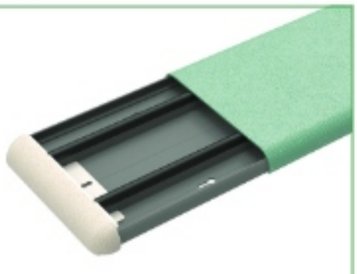

Retainer is made of totaly recyled PVC. That's why it is more enviromentalist and economic than aluminium retainer and plastic cover.

# WG150-2

## DOOR KICK PLATE

WG036
RIGHT AND LEFT END

It is a door plinth band that is mounted on the lower part of the doors with a profile on aluminium with a width of 150 mm and a depth of 10 mm. Profile lengths of 4 meters are produced.

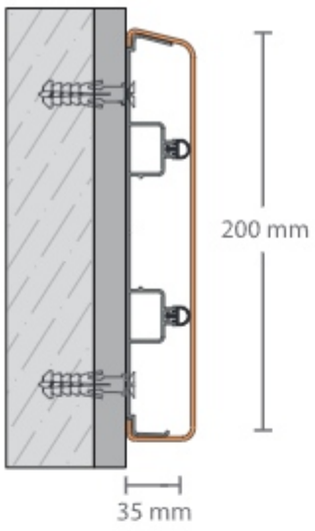


# WG200

## WALL PROTECTION CRASH RAIL

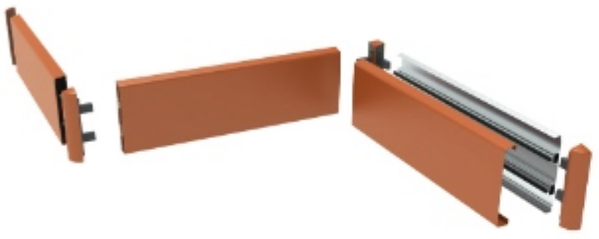

WG200 is a wall protection tape with a width of 200 mm and a depth of 35 mm, which is mounted on the wall with a continuous rear aluminium profile. It absorbs the impacts thanks to the lower Styles. Thanks to its 35 mm depth and lift shock absorber wick, it is used especially for heavy-duty corridors for protection against impacts. Profile lengths are 4 meters and are produced in 32 different colours.

WG001
LEFT END

WG002
RIGHT END

WG003
OUTER CORNER

WG004
INNER CORNER

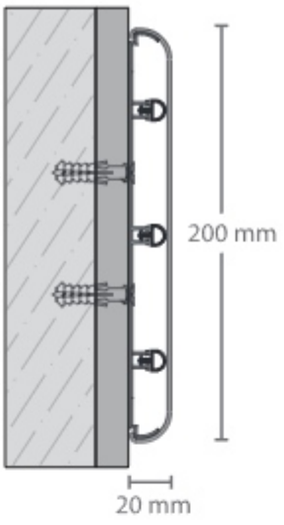


# WG201

## WALL PROTECTION CRASH RAIL

WG 201 is a wall protection tape with a width of 200 mm and a depth of 20 mm, which is mounted to the wall with a continuous rear aluminium profile. It absorbs the impacts thanks to the lower wicks. It provides a wide protection area in corridors narrower than 2 meters thanks to its 200 mm top width. For this reason, they are highly preferred in hospital corridors that are in intensive use. Profile lengths are 4 meters and are produced in 32 different colours.

WG030
LEFT AND RIGHT END

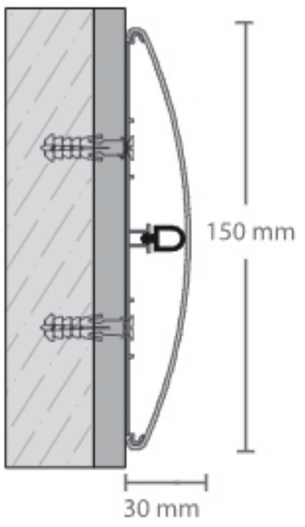


# DC150

## WALL PROTECTION CRASH RAIL

DC 150 is a wall protection tape that is mounted on the wall with a continuous aluminium profile with a width of 150 mm and a depth of 30 mm. It absorbs the impacts due to the bottom wick. Its curved top surface is preferred in many projects. Produced in 32 different colours, the permit is applied in harmony with other building materials. Profile lengths are produced in 4 meters.

DC013
RIGHT LEFT END CAP

DC014
EXTERNAL CORNER

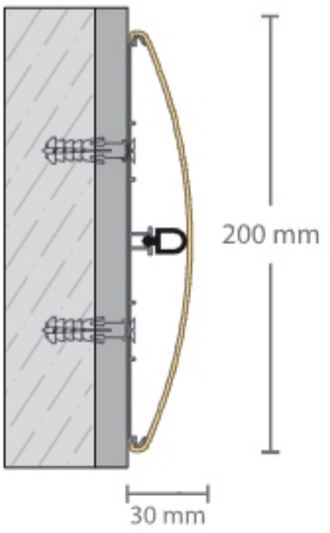


# DC200

## WALL PROTECTION CRASH RAIL



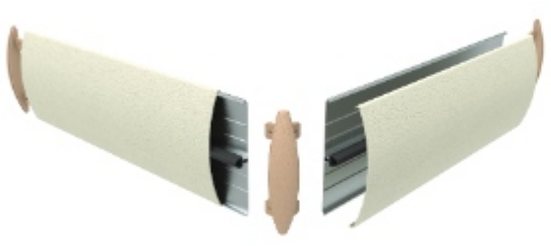

DC 200- It is a wall protection tape that is mounted on the wall with a continuous aluminum profile with a width of 200 mm and a depth of 30 mm. It absorbs the impacts due to the bottom insert. It is decorative with its scratch-proof top vinyl cover. With the end pieces, that look the same as the vinyl top cover, a decorative finish is provided. It is manufactured in 32 different colors and provides a harmonious appearance with other building materials. Profile length is manufactured as 4 meters.

DC001
RIGHT LEFT END CAP

DC003
EXTERNAL CORNER

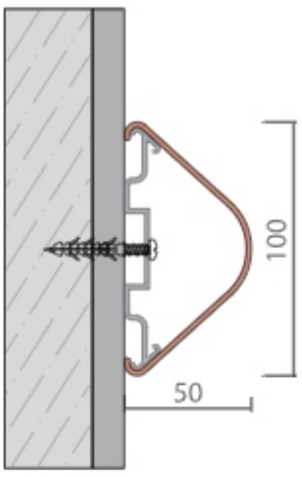


# WG101

## BEDHEAD PROTECTOR

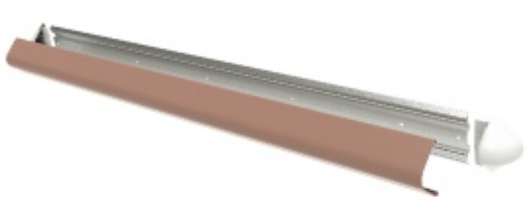

WG101 is a Bedhead Protector system that can be used in all kinds of buildings such as hospitals. This system can be produced in standard and non-standard lengths and also consists of aluminum and PVC cover. Hospital bedhead protectors provide simple, effective protection that keeps walls in perfect condition, reducing ongoing maintenance requirements and associated costs. It is manufactured in 32 different colors and provides a harmonious appearance with other building materials. Profile lengths are manufactured as 4 meters.

WG060 RIGHT AND LEFT END CAP

# WG101

## BEDHEAD PROTECTOR WITH BRACKET

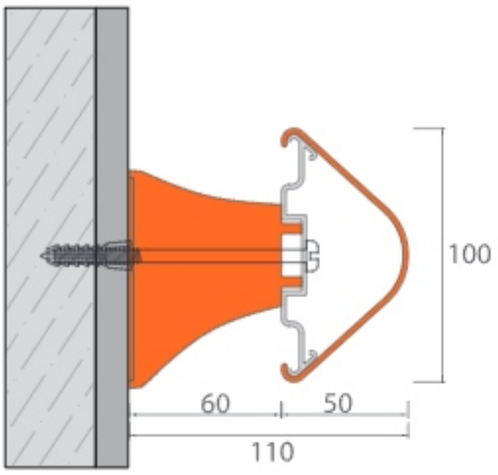


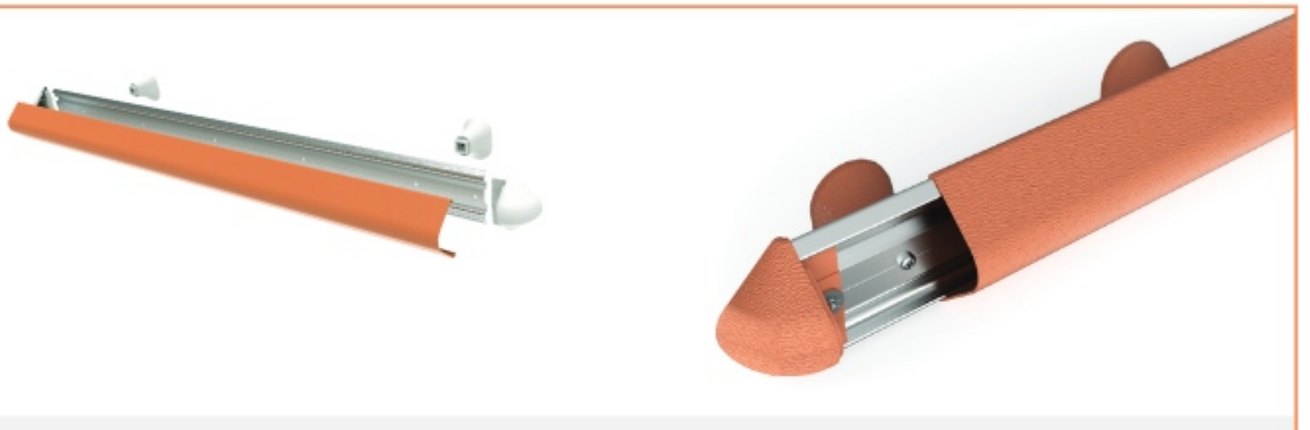

WG101 is a Bed Head Protector system that can be used in all kinds of buildings such as hospitals. This system can be produced in standard and non-standard lengths and also consists of aluminum and PVC cover. Hospital bedhead protectors provide simple, effective protection that keeps your walls in perfect condition, reducing ongoing maintenance requirements and associated costs. It is manufactured in 32 different colors and provides a harmonious appearance with other building materials. Profile lengths are manufactured as 4 meters.

WG005
HANDRAIL BRACKET

WG060
RIGHT LEFT END CAP

# CR50
## CHAIR RAIL

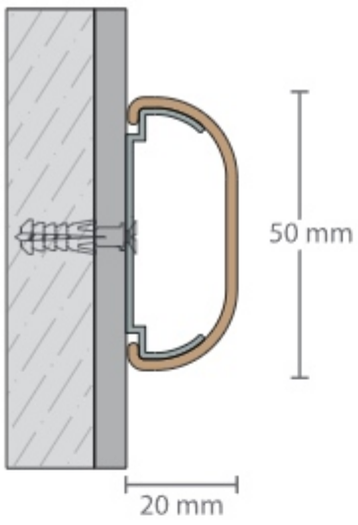

CR 50 is a chair's back wall protection tape that is mounted to the wall with a continuous aluminum profile with a width of 50 mm and a depth of 20 mm. It is decorative with its scratch-proof top vinyl cover. A decorative finish is provided due to the end pieces that look the same as the vinyl top cover. It is manufactured in 32 different colors and provides a harmonious appearance with other building materials. Profile lengths are manufactured as 4 meters.

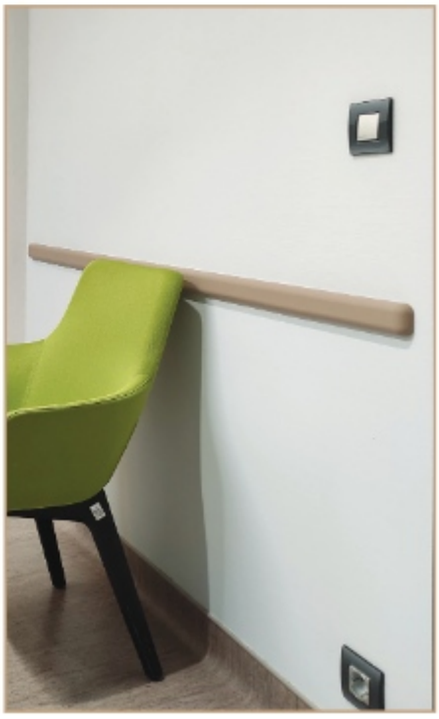

WG016
RIGHT LEFT END CAP

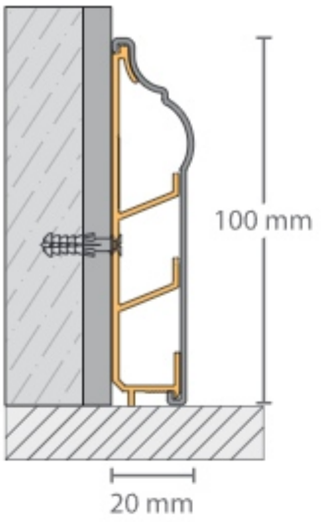


# DC101

DECORATIVE PVC SKIRTING WITH CABLE DUCT

DC019
RIGHT END CAP

DC020
LEFT END CAP

DC021
EXTERNAL CORNER

DC022
INTERNAL CORNER



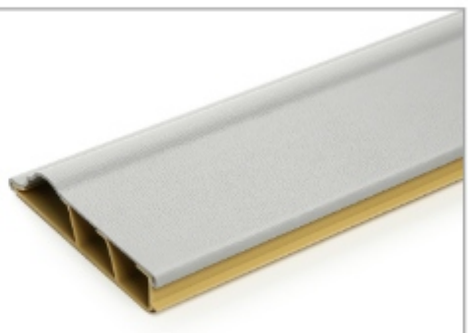

Patterned decorative PVC skirting with cable channels. The profile has right-left end elements, external and internal corner pieces. If requested, it is priced as a piece. Profile lengths are 4 meters and are manufactured in 32 different colors.



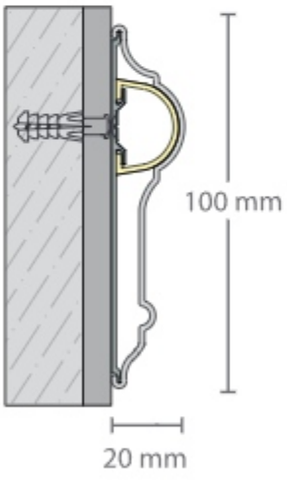


# DC100

DECORATIF WALL PROTECTION TAPE

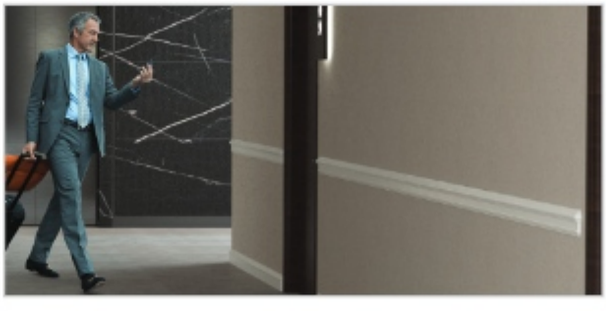

DC015
RIGHT END CAP

DC016
LEFT END CAP

DC017
EXTERNAL CORNER

DC018
INTERNAL CORNER

DC100 is a vinyl wall protection tape system on aluminum that is mostly used for decorative purposes in hotel and residence projects. It is decorative with its scratch-proof top vinyl cover. Profile lengths are 4 meters and manufactured in 32 different colors.

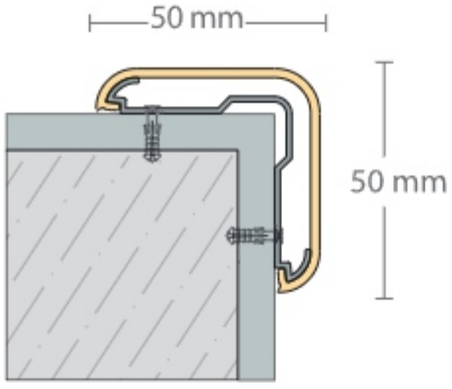


# CG50

CORNER PROTECTION SYSTEM

WG012
CORNER END CAP

G50 is the corner guard which is made of non-deformable and scratch-resistant vinyl with an aluminum bottom and decorative top surface, which can be used in all kinds of structures such as hospitals, shopping malls, restaurants, hotels, dormitories, universities, dormitories, military buildings and public buildings to protect the wall corners during the use of buildings protection system. It can be produced in a specific height (L: 1 m, L: 1.50 m) as well as throughout the floor height. It is decorative with its top end cap. It is manufactured in 32 different colors.

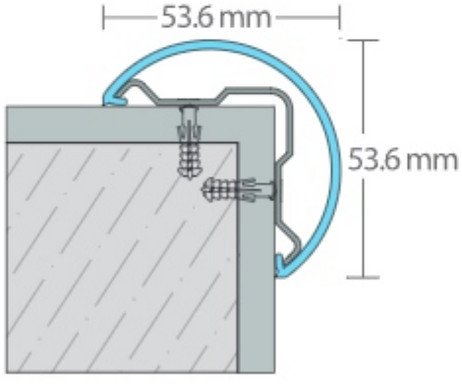


# CG51

CORNER PROTECTION SYSTEM

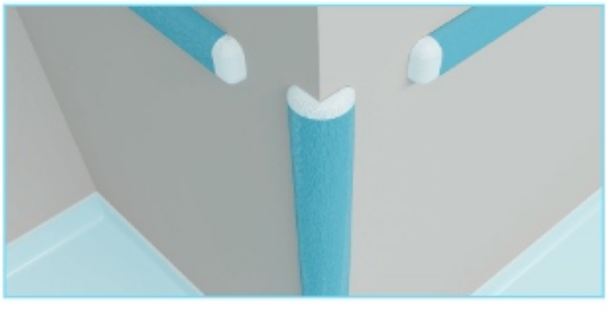

WG037
CORNER END CAP

It is a corner protection system that is used in kindergartens, dormitories and hospitals with more shock absorbing and deformation properties than other corner protections.

# CG25B
# CG50B

STICK ON CORNER GUARD

CG 50B

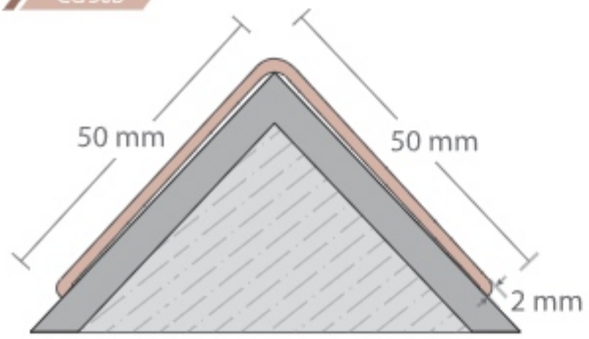


CG 25B

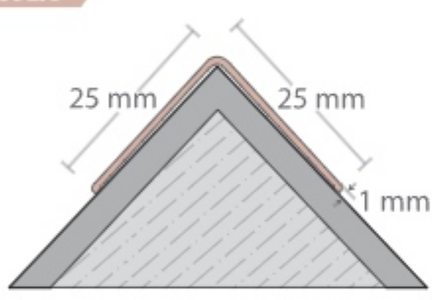

CG 25B & CG 50B are an adhesive corner protection system made of non-deformable and non-scratch vinyl with a decorative top surface, which can be used in all kinds of structures such as hospitals, shopping malls, restaurants, hotels, dormitories, universities, dormitories, military buildings and public buildings to prevent deformations on the wall corners during the use of buildings. They can be used in a specific height (L: 1 m, L: 1.50 m) or it is applied with vinyl plate adhesive throughout the floor height. They are manufactured in 32 different colors.

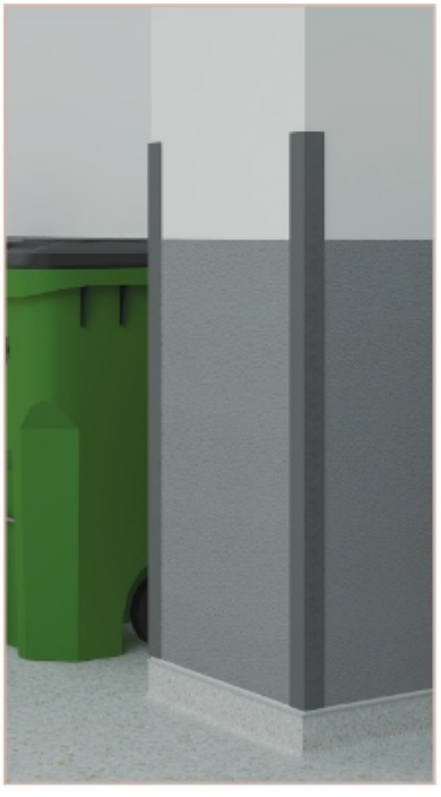

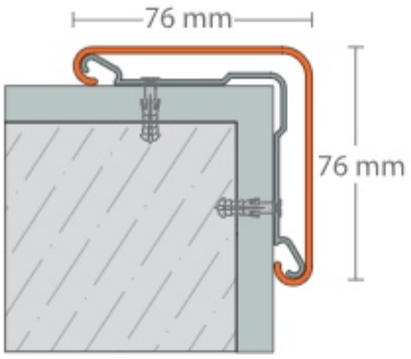


# CG76

## CORNER PROTECTION SYSTEM

WG008 END CAP

CG76 is a vinyl over aluminum corner protection system that can be used in all kinds of buildings such as hospitals, shopping malls, hotels, dormitories, universities and public buildings to protect the corners of the walls. It can be used in a specific height (L: 1 m, L: 1.50 m) as well as throughout the floor height. It is decorative with a top end cap. It is manufactured in 32 different colors.

# CG76B

## CORNER PROTECTION SYSTEM

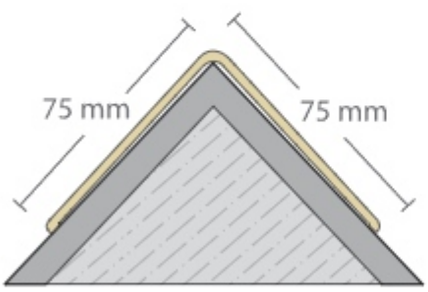

CG76 B is a corner protection system made of non-deformable and scratch-proof vinyl with a decorative top surface, which can be used in all kinds of buildings such as hospitals, shopping malls, restaurants, hotels, dormitories, universities, dormitories, military buildings and public buildings to prevent deformations on the wall corners during the use of buildings. It can be used in a specific height (L: 1.20 m, L: 1.50 m) as well as throughout the floor height. It is manufactured in 32 different colors.

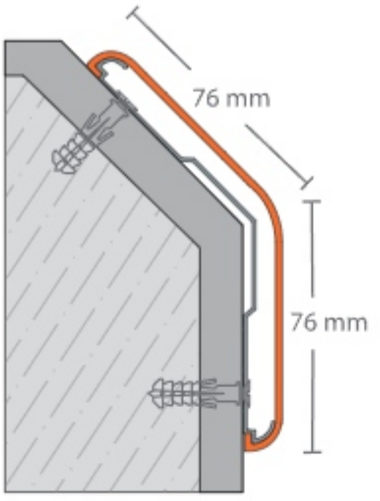


# CG76A

## ANGULARITY CORNER GUARD SYSTEM

CG76A 135° is a vinyl over aluminum corner protection system that can be used in all types of buildings such as hospitals, shopping malls, hotels, dormitories, universities, and public buildings to protect wall corners. It can be used in a specific height (L: 1 m, L: 1.50 m) as well as throughout the floor height. It is decorative with a top end cap. It is manufactured in 32 different colors.

WG009
CORNER END CAP

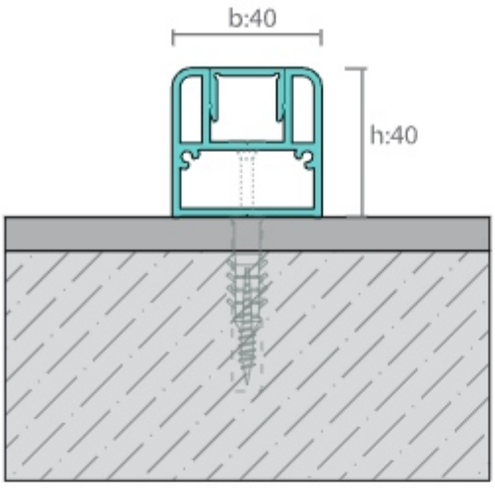


# WG102
## BED HEAD STOPER

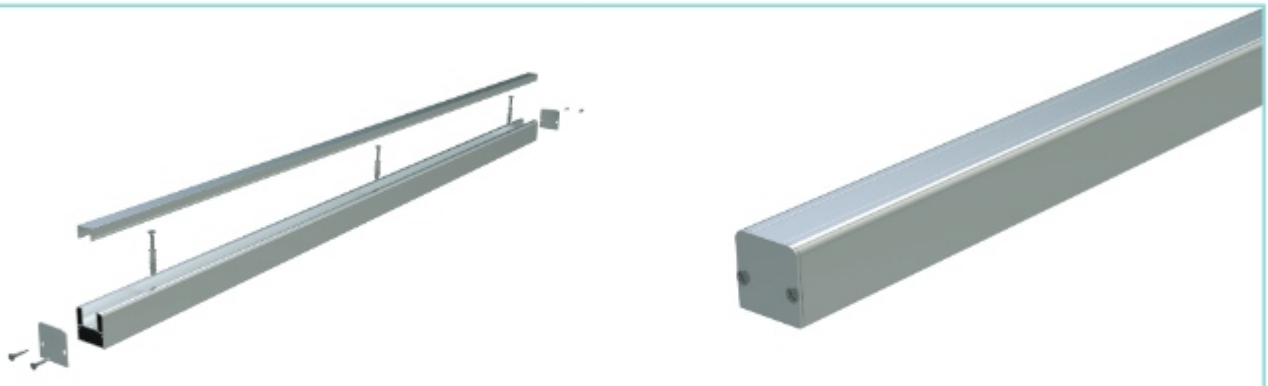

WG102 The bedhead stopper, which is fixed by screwing to the ground with its strong structure of aluminum, forms an integrity with the clips and cover that installs on it. Not only with the bedside stopper function in hospitals, but also in all intensive service vehicle traffic, food carts, clean dirty laundry carts, etc. in the shuttles where wheeled vehicles pass, provides a stopper without being hit to the wall. Aluminum bed head stopper, which is mostly produced as 1 meter for patient beds, is produced in natural anodized or ral paint colors, and it is also manufactured in 3 meter lengths for other places.

WG067 END CAP

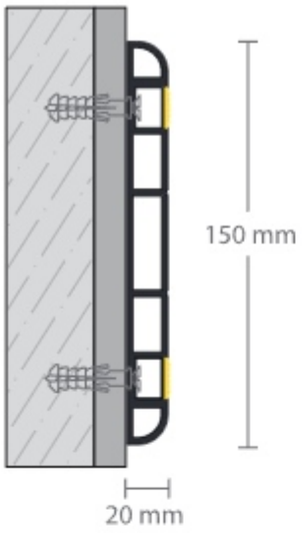


# RG150

## RUBBER WALL PROTECTION SYSTEM

Rubber wall guard system with a width of 150 mm and a thickness of 20 mm is used in parking lots and factories or in areas where deformation can be more intense to prevent deformations that may occur on the walls. It creates a decorative appearance with its right and left end caps. Profile lengths are manufactured as 3 meters.

RG01 RIGHT AND LEFT END CAP

# RG151
# RG200

TPE WALL PROTECTION SYSTEM

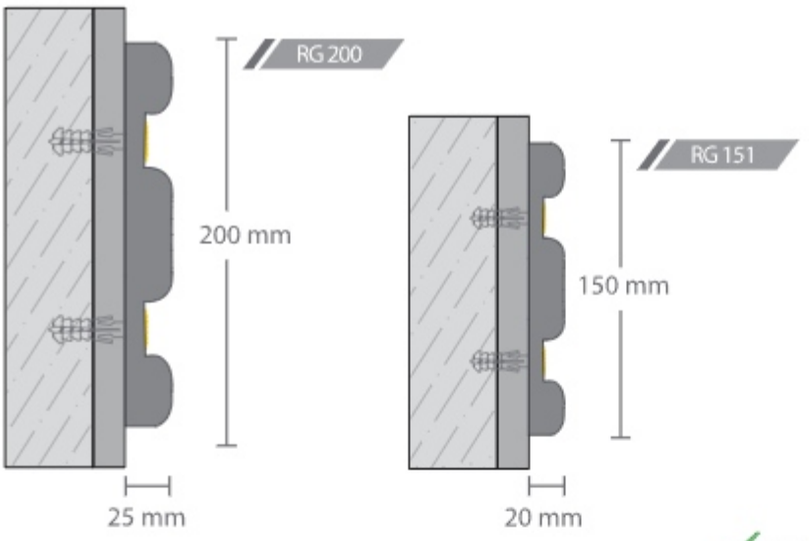


✓ *100% Recyclable* ✓ *Does not leave traces and colors*

TPE wall protection system with a width of 150 - 200 mm, thickness of 20 - 25 mm is used in parking lots, factories or in areas where deformation can be more intense to prevent deformations that may occur on the walls. It prevents areas from being damaged for many years with its strong structure. It does not cause pollution and bad appearance during application with its special formula. Profile lengths are manufactured as 3 meters. Color alternatives are black and grey.

RG006 END CAP
(for RG 151)

RG004 END CAP
(for RG 200)

# RG50& RG101

TPE CORNER PROTECTION SYSTEM

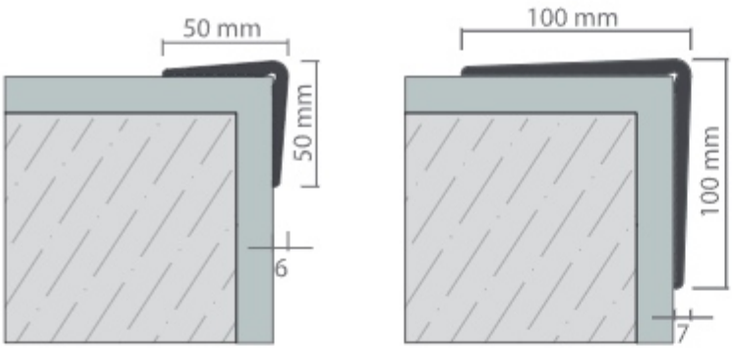


RG 50

RG 101

It is a TPE based corner protection profile which is applied with suitable adhesives to wall and column corners with width of 50 - 100mm wing. They are manufactured in 1000 /1500/3000 mm lengths.

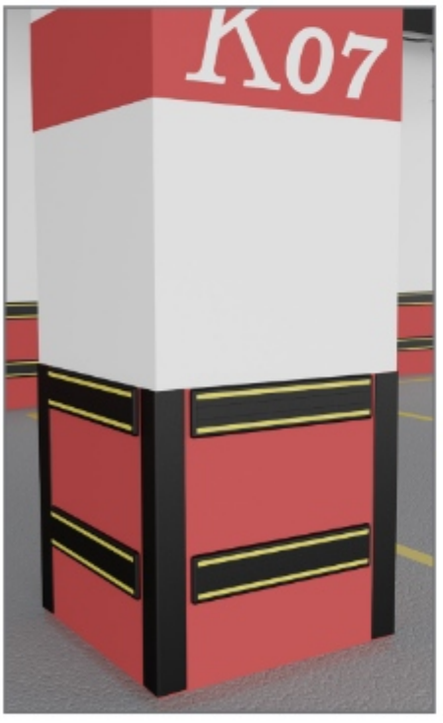


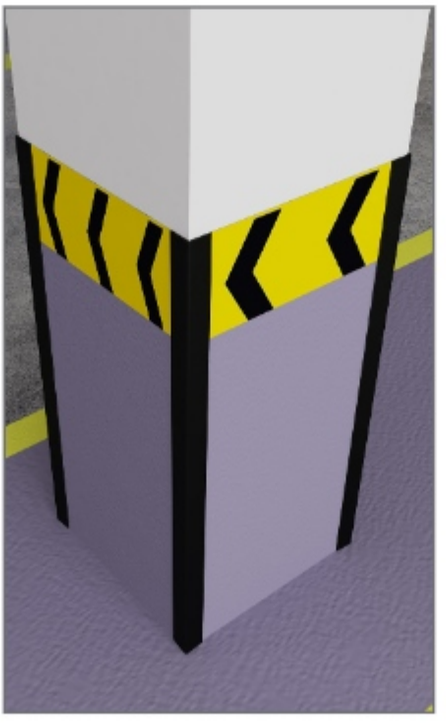

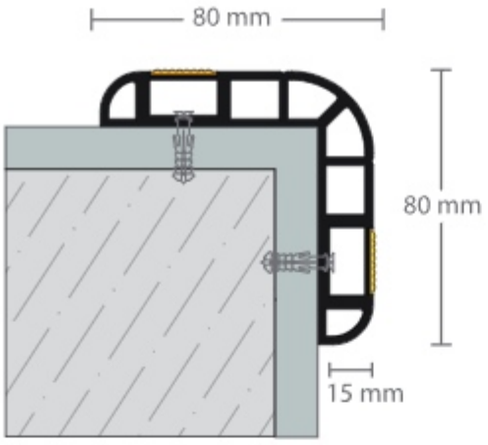


# RG80

## RUBBER CORNER PROTECTION SYSTEM

RG80 Rubber corner protection system is used both in parking lots and factories or in areas where deformation is more intense to prevent deformations in column and wall corners. It creates a decorative appearance with its top end caps. It can be used in a specific height (L: 1 m, L: 1.50 m) as well as throughout the floor height. Profile lengths are manufactured as 3 meters.

RG02 END CAP

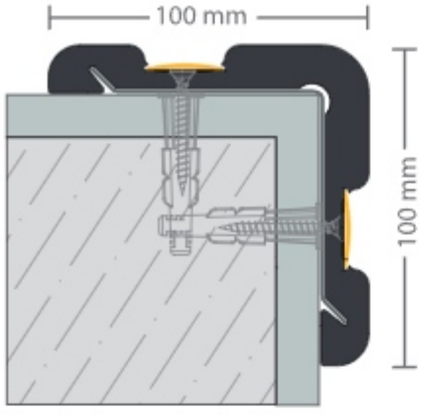


# RG100

## RUBBER CORNER PROTECTION SYSTEM

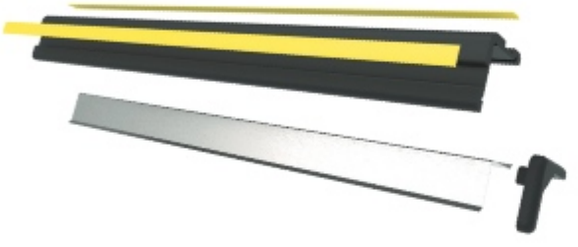

Used as protecting corner deformations in factories or areas where deformation may be more intense but especially in parking lots by the dimensions of 100 mm x 100 mm. Colour alternatives; black and grey. Can be used as specific length such as 1,00 mt, 1,50 mt but also can be used as standard 3 mt length. Provides straight appearance because of the TPE and continious metal retainer.

RG03 END CAP
(FOR CHAMFER COLUMNS)

# HSP SERIES

## HYGIENIC SKIRTING AND WALL PROTECTION

HSP 75

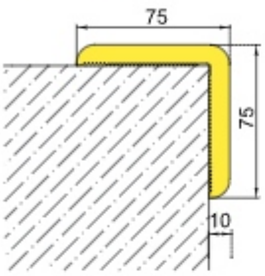


HSP 100

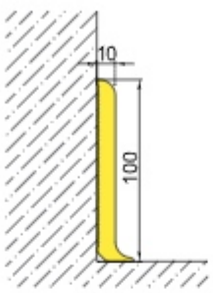


HSP 150

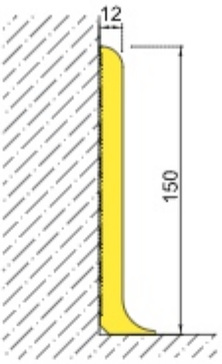

HSP Series wall corner guards and skirting boards are produced from soft hygienic PVC raw material and are produced in yellow colour to attract attention and stimulate. It is used on surfaces that should be hygienic such as dining halls, cold storage, and food facilities. It can be used easily on washable walls.

HSP 003:
HSP 100 EXTERNAL CORNER BIT

# HSP SERIES

## HYGIENIC SKIRTING AND WALL PROTECTION

HSP 102

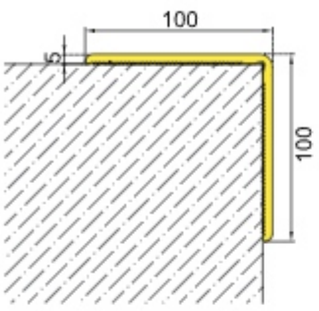


HSP 151

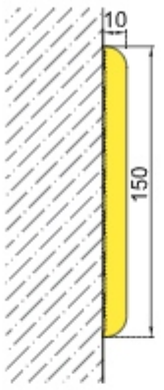


HSP 200

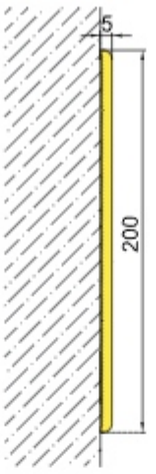


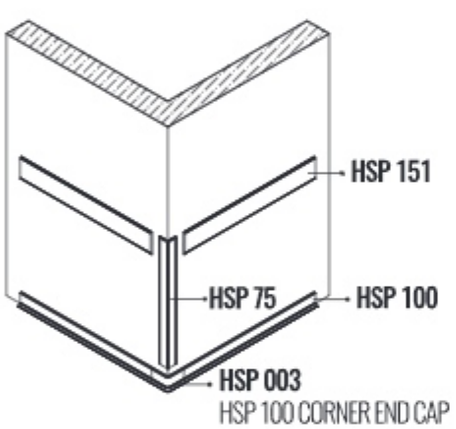


HSP 100 CORNER END CAP

RUBBER & TPE
WALL PROTECTION
SYSTEM

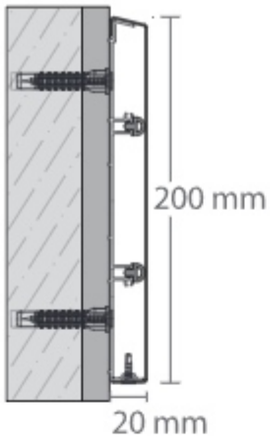


# WG200 SS

STAINLESS WALL PROTECTION SYSTEM

STAINLESS DESIGN OPTIONS

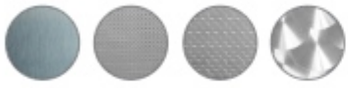

WG046 LEFT
AND RIGHT END

It is a stainless wall protection band formed by attaching a 200 mm wide 1.00 mm thick 304 quality stainless sheath to aluminium carrier profiles. It absorbs the impacts thanks to the shock-absorbing wicks.

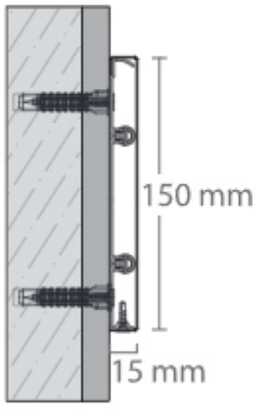


# WG151 SS

STAINLESS WALL PROTECTION SYSTEM

STAINLESS DESIGN OPTIONS

WG048 LEFT
AND RIGHT END

Symmetrical 150 mm top part is connected to aluminium part with screws. It absorbs the impacts thanks to the shock absorbing wicks.

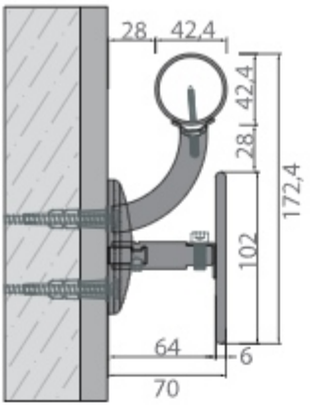


# WG170 SS

STAINLESS HANDRAIL WALL PROTECTION SYSTEM

WG068 SELF BRACED ELBOW & INNER EXTERNAL CORNER

WG071 STAINLESS HANDRAIL HANDLE AND MOUNTING APPARATUS

304 The system consists of 304 quality, 6 mm thick stainless steel wall protection band and a 42 mm diameter stainless steel pipe handrail. The wall protection tape has round self-finishing and the handrail has right-left & inside outside compatible finishes. Bracelets or flush finishes are available as alternatives. Can be produced specially in project dimensions. With a single stainless steel handle, both wall protection band and handrail can be mounted at once. The system is easy to apply, hygienic, and decorative.

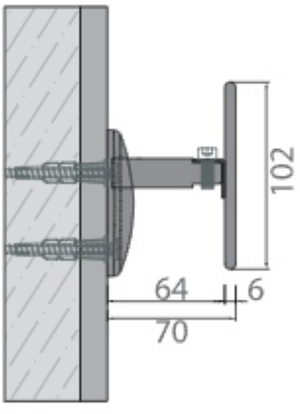


# WG100 SS

STAINLESS HANDRAIL WALL PROTECTION SYSTEM

WG070 STAINLESS MOUNTING APPARATUS

This is a 304 quality stainless steel wall protection tape with a thickness of 6mm.Round design of the top provides comfortable handling. The system has a self-radius finish. Can be produced in project-specific dimensions. Stainless steel brackets are used to mount the system to the wall. The system is easy to apply, hygienic, and decorative.

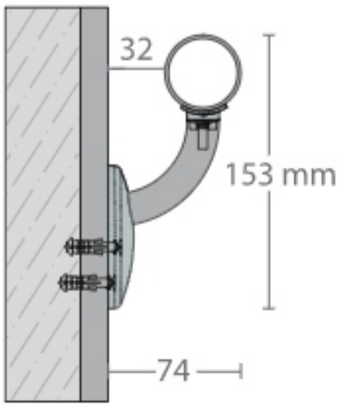


# WG42 SS

STAINLESS HANDRAIL WALL PROTECTION SYSTEM

WG039 STAINLESS STEEL BRACKET

WG034 FLUSH FINISH HANDRAIL ELBOW

WG068 SELF BRACED ELBOW & INNER EXTERNAL CORNER

WG069 FLUSH INNER OUTER CORNER

WG072 PIPE COLLAR

ARFEN's 42 mm stainless steel or vinyl handrail systems are suitable to international standards with hygienic and decorative structure.

# WG 501
# WG 502

STAINLESS HANDRAIL WALL PROTECTION SYSTEM

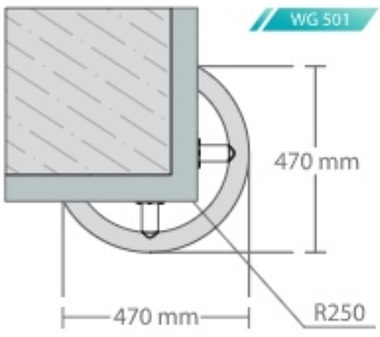

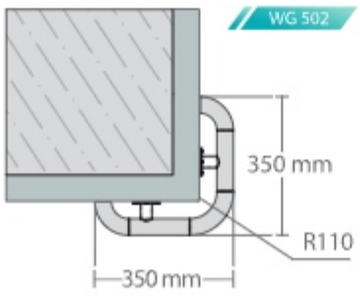

They are oval corner protection systems that protect the corners of walls and columns against the collisions of vehicles such as forklifts or pallet trucks in food facilities, markets and all kinds of service and load corridors.

# KP SERIES

## STAINLESS DOOR PROTECTION PLATES

w: 85-105-115-125 cm
h: 15-20-25 cm

KP 85S - 105S - 115S - 125S

1 mm satined stainless steel door handles produced in 304 quality are fixed to the door with stainless steel screws with a width of 85-105-115-125 cm and a height of 15-20-25 cm on both sides of the door leaf, the lower part of the wing and the door handle measurement. Generally used in service doors of schools, hotels, restaurants, cafes, hospitals and cafeterias, the stainless steel door handle is robust, durable and aesthetic with its appearance that provides frequency in spaces.

# CG50S

STAINLESS CORNER PROTECTION SYSTEM

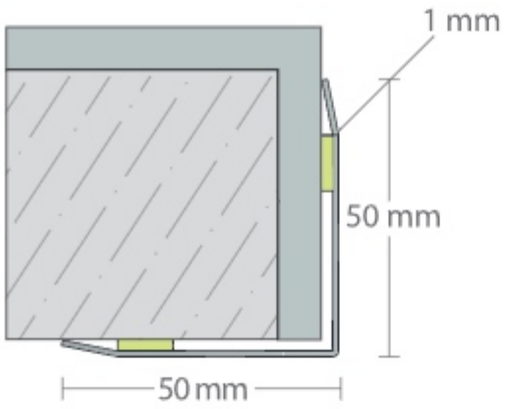


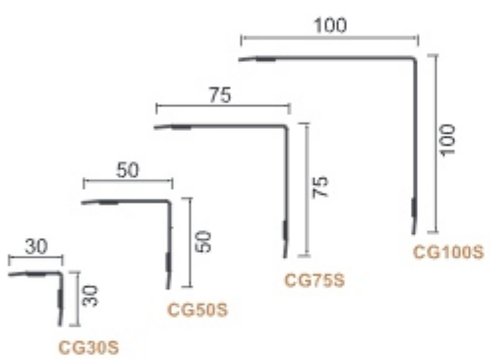


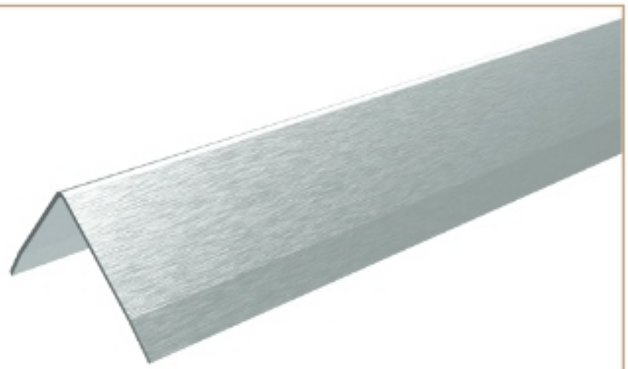

1 mm stainless corner protection profiles produced in 304 quality, which can be used in shopping malls, hotels, restaurants, schools and public buildings, adapt to the general metal effect in the space, thanks to their stainless appearance. It is resistant to impacts that may come to corners on columns and walls. It can be used at a certain height (L: 1m L: 1.50m) as well as throughout the floor height. Although it is fixed to the wall by screws, it can be applied to corner walls and column corners with polyurethane adhesives or lift-sided tapes.

# WG1004 SS

STAINLESS PLATES

STAINLESS DESIGN OPTIONS

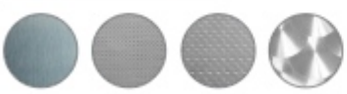

SS01 SS02 SS03 SS04

They are products that can be applied to walls with special adhesives or special end profiles made of 304 and 316 quality stainless steel with 1000 mm, 1250 mm, 1500 mm width t:1.00 mm thickness. And are hygienic, fireproof and stainless wall protection plate products that can be used in all kinds of buildings such as shopping malls, hospitals, metro stations, and food and health facilities.

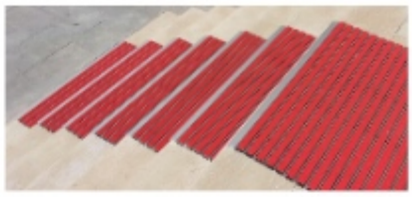

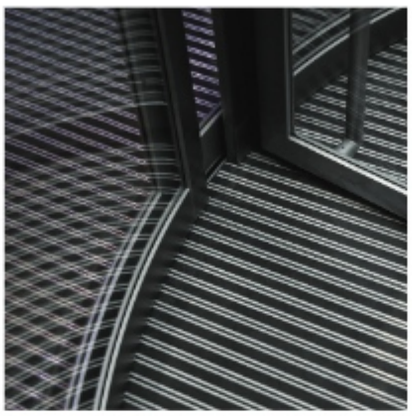

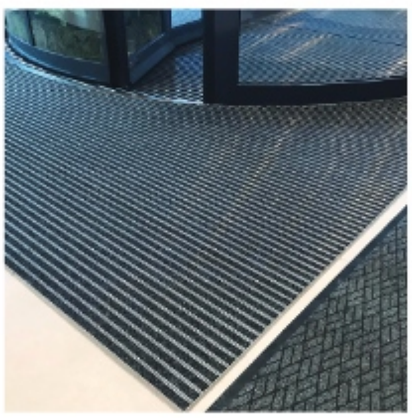

www.arfen.com

ENTRANCE
MAT SYSTEMS

# ENTRANCE
# MAT SYSTEMS

ARFEN®

## HH 01

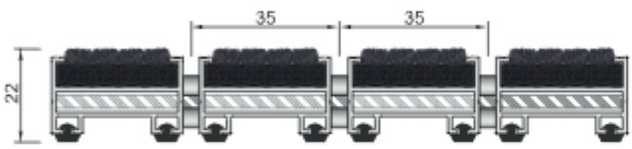


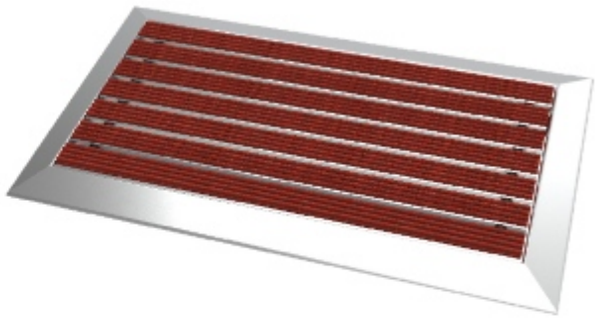

**HH 01 Aluminium Mat System**
It is an indoor matting system that traps dirt and mud thanks to aluminium profiles with carpet top surfaces. The long-lasting mat system, which is connected to each other with steel ropes, can be framed or produced in a pool type that fits into a certain space. Its depth is 2 cm. It provides sound insulation thanks to its bottom wicks.

## HS 02

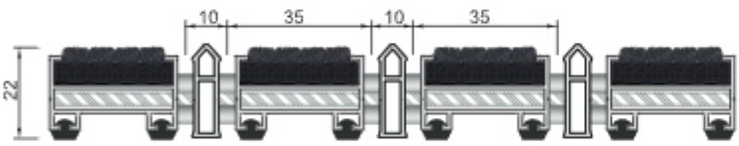

**HS 02 Aluminium Mat System**
It is an indoor matting system that traps dirt and mud due to aluminium profiles and aluminium scrapers with a carpet top surface. The long-lasting mat system, connected to each other with steel ropes, can be framed or produced in a pool type that fits into a particular space. Its depth is 2 cm. It provides sound insulation thanks to its bottom wicks.

Carpet Colours

**They can be produced in special sizes.**
Standard framed types are (40x70), (50x80), (60x90) cm.

**FLYMAT 008**
STANDARD SERIES
FRAME PROFILE

**FLYMAT 026**
STANDARD SERIES FLUSH
TYPE POOL SIDE PROFILE

**MB2515**
TOP TYPE
POOL SIDE PROFILE

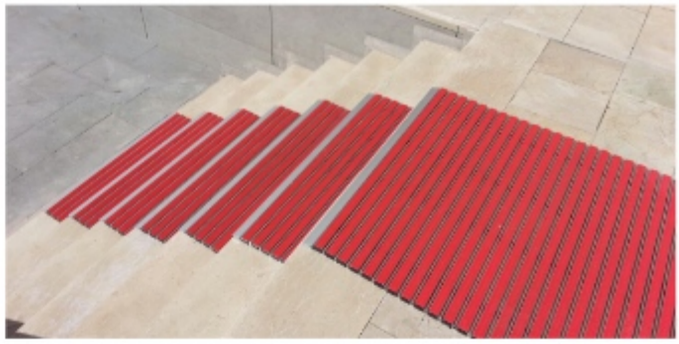

## HF 03

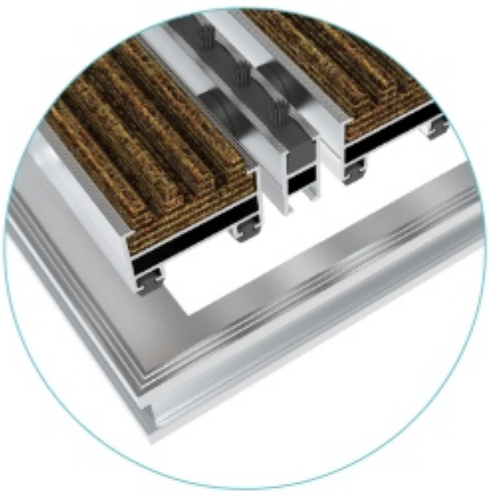

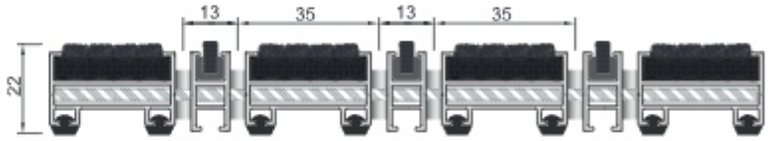


**HF 03 Aluminum Mat System**

It is an indoor matting system that traps dirt and mud thanks to aluminium profiles and brush scrapers with a carpet top surface. The long-lasting mat system, connected to each other with steel ropes, can be framed or produced in a pool type that fits into a particular space. Its depth is 2 cm. It provides sound insulation due to its bottom wicks.

## HH 04

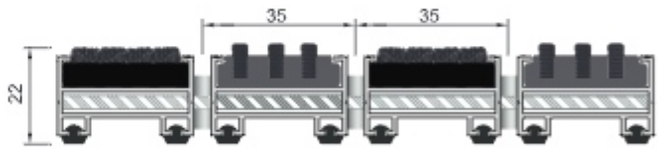


**HH 04 Aluminum Mat System**

It is an indoor matting system that traps dirt and mud thanks to aluminium profiles and cassette brushes with carpet top surfaces. The long-lasting mat system, connected to each other with steel ropes, can be framed or produced in a pool type that fits into a particular space. Its depth is 2 cm. It provides sound insulation due to its bottom wicks.

Carpet Colours

Black | Grey | Red | Camel Hair

## KK 06

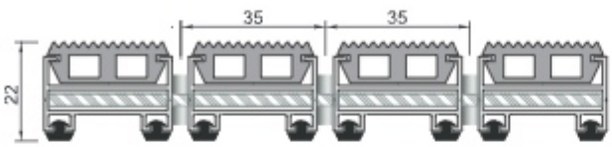


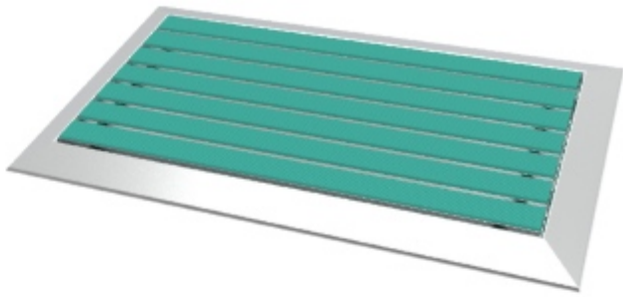

**KK 06 Aluminium Mat System**
It is an outdoor matting system that keeps dirt and mud on aluminium profiles by means of rubber strips. The long-lasting mat system, connected to each other with steel ropes, can be framed or produced in a pool type that fits into a particular space. Its depth is 2 cm. It provides sound insulation due to its bottom wicks.

## KS 07

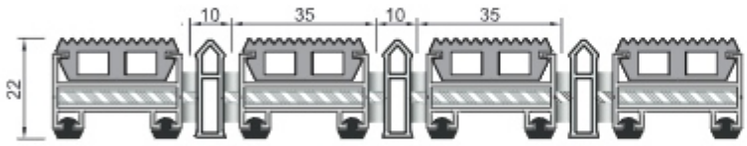

**KS 07 Aluminium Mat System**
It is an outdoor matting system that traps dirt and mud thanks to rubber-striped aluminium profiles and scrapers. The long-lasting mat system, connected to each other with steel ropes, can be framed or produced in a pool type that fits into a particular space. Its depth is 2 cm. It provides sound insulation thanks to its bottom wicks.

## KF 07

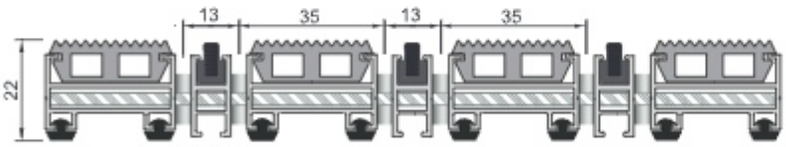

**KF 07 Aluminium Mat System**
It is an outdoor matting system that traps dirt and mud thanks to rubber-striped aluminium profiles and brush scrapers. The long-lasting mat system, connected to each other with steel ropes, can be framed or produced in a pool type that fits into a particular space. Its depth is 2 cm. It provides sound insulation thanks to its bottom wicks.

"Standard colors for rubber are black and gray and can be produced in various colors."

## KF 08

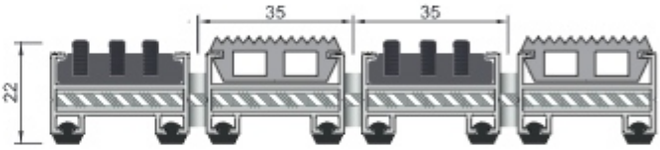


**KF 08 Aluminum Mat System**

It is an outdoor matting system that traps dirt and mud thanks to rubber-striped aluminium profiles and cassette brushes. The long-lasting mat system, connected to each other with steel ropes, can be framed or produced in a pool type that fits into a particular space. Its depth is 2 cm. It provides sound insulation thanks to its bottom wicks.

## KF 09

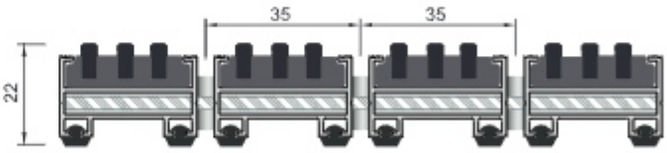


**KF 09 Aluminum Mat System**

Due to the cassette brushed aluminium profiles, dirt is an outdoor matting system that traps mud. The long-lasting mat system, connected to each other with steel ropes, can be framed or produced in a pool type that fits into a particular space. Its depth is 2 cm. It provides sound insulation thanks to its bottom wicks.

## HH 05

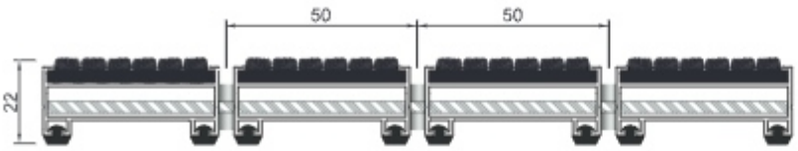

**HH 05 Aluminium Mat System**
It is an indoor matting system that traps dirt and mud thanks to aluminium profiles with a wide carpet surface. The long-lasting mat system, connected to each other with steel ropes, can be framed or produced in a pool type that fits into a particular space. Its depth is 2 cm. It provides sound insulation thanks to its bottom wicks.

## HH 06

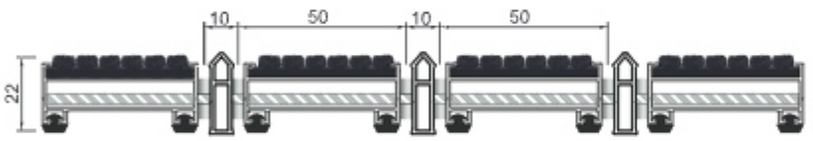

**HH 06 Aluminium Mat System**
It is an indoor matting system that holds dirt and mud thanks to wide carpet surface aluminium profiles and scrapers. The long-lasting mat system, connected to each other with steel ropes, can be framed or produced in a pool type that fits into a particular space. Its depth is 2 cm. It provides sound insulation due to its bottom wicks.

## HH 07

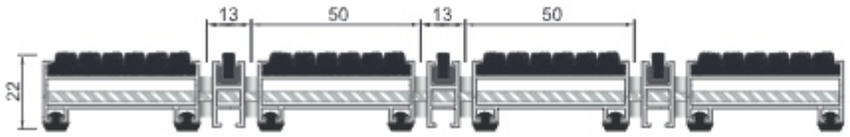


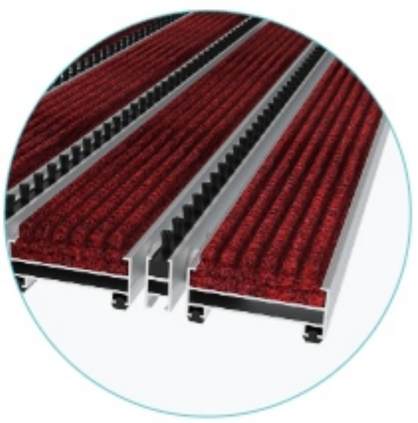

**HH 07 Aluminium Mat System**
It is an indoor matting system that holds dirt and mud thanks to wide carpet top surface aluminium profiles and brush scrapers. The long-lasting mat system, connected to each other with steel ropes, can be framed or produced in a pool type that fits into a particular space. Its depth is 2 cm. It provides sound insulation due to its bottom wicks.

Carpet Colours

## T01

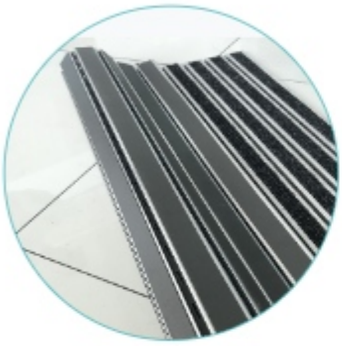

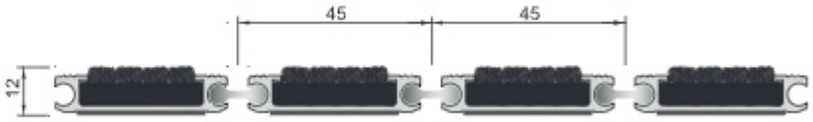

**T01 Thin Series Carpet Top Surface Mat System**
It is a long-lasting indoor mat system that can be rolled and can hold dirt and dust with its low height and perforated PVC connection profiles. Its depth is 12 mm. They can be produced as recessed and framed types.

## T02

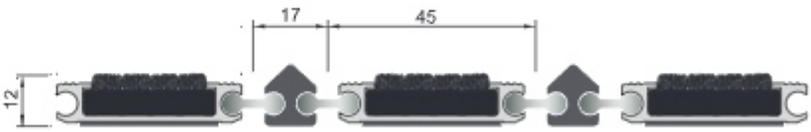


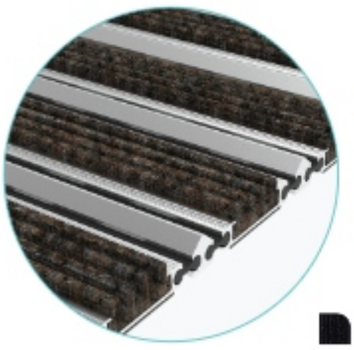

**T02 Thin Series Carpet + Scraper Top Surface Mat System**
They are indoor matting systems that reduce the dirt on the substrate with their perforated PVC profiles that can hold a high amount of dust and dirt thanks to their scraper profiles.

Carpet Colours

**FLYMAT 022**
THIN SERIES
FRAME PROFILE

**FLYMAT 027**
THIN SERIES FLUSH
TYPE POOL SIDE PROFILE

**MB2515**
TOP TYPE
POOL SIDE PROFILE

## T03

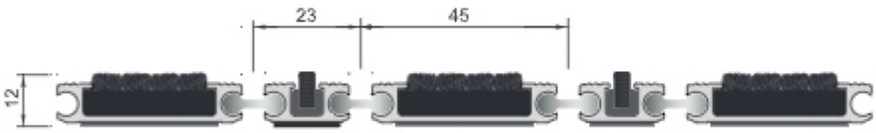

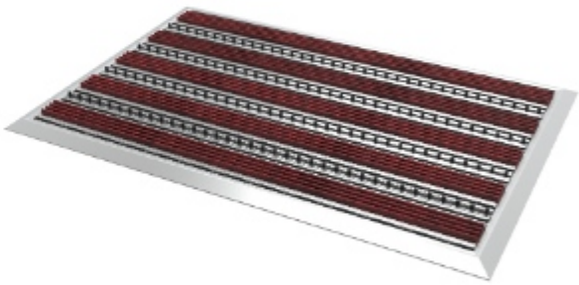

**T03 Carpet + Brush Top Surface Mat System**
They are thin series aluminium mat systems with carpet + brush top surface. They are decorative and long-lasting mat systems that can hold dust and dirt.

## T04

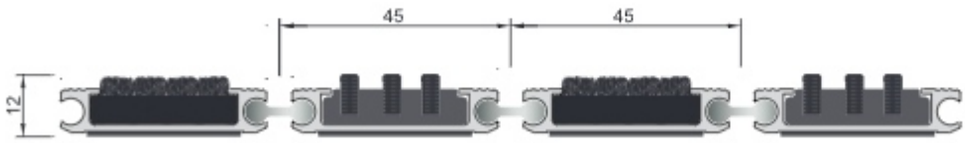

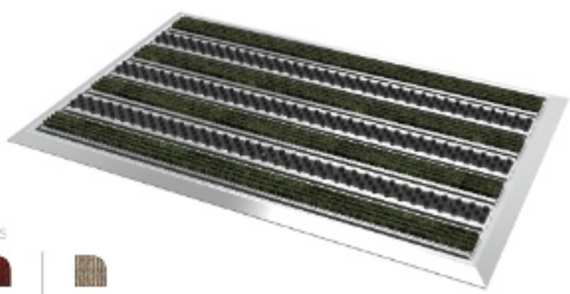

**T04 Carpet + Entrance Mat System with Cassette Brushed Top Surface**
An indoor matting system with carpet + cassette brush that can hold dust and dirt, suitable for heavy pedestrian traffic.

Carpet Colours

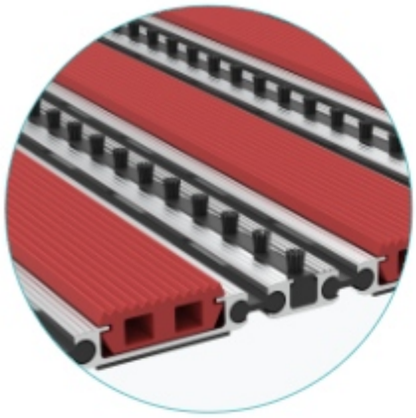

## T05

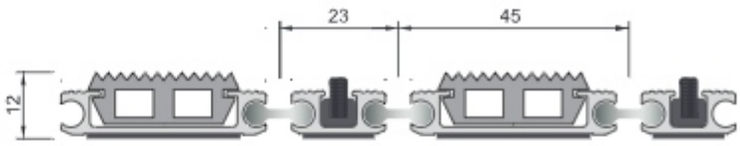


**T05 Rubber + Brush Top Surface Entrance Mat System**
A thin series outdoor matting system. It holds dust due to brush scrapers and mud thanks to rubber wicks. It is long-lasting and decorative.

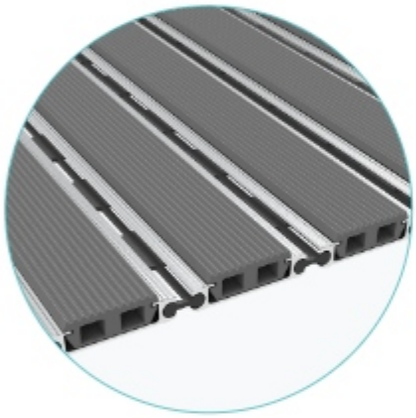

## T06

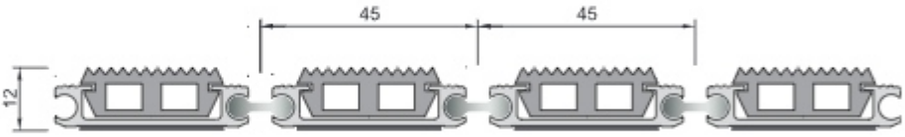


**T06 Thin Series Rubber Surface Mat System**
They are aluminum outdoor mat systems with a rubber top surface that can hold dirt and mud with their low height and perforated PVC connection profiles.

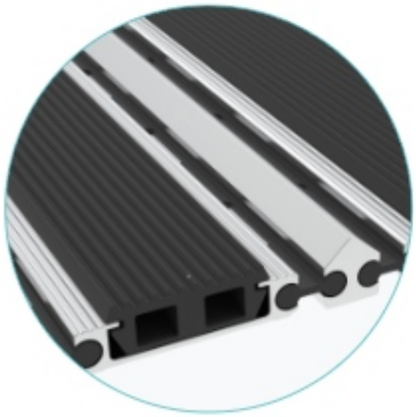

## T07

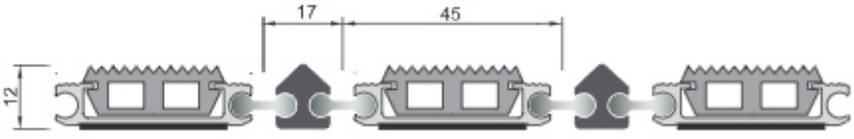


**T07 Rubber + Scraper Top Surface Mat System**
They are outdoor matting systems that can hold dirt and mud in areas subject to heavy pedestrian traffic.

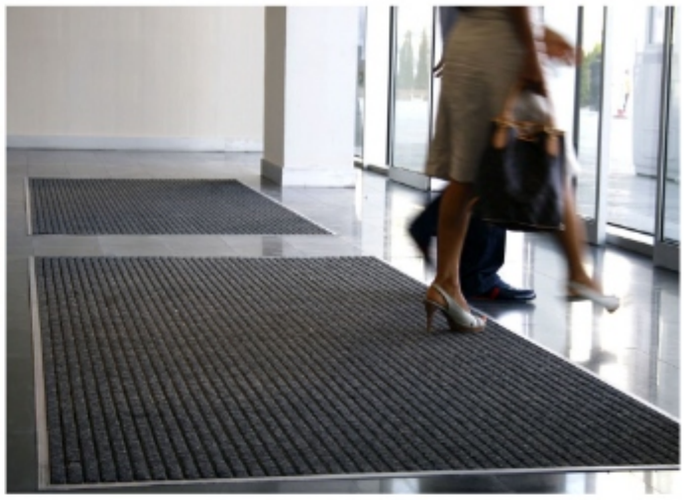

## T08

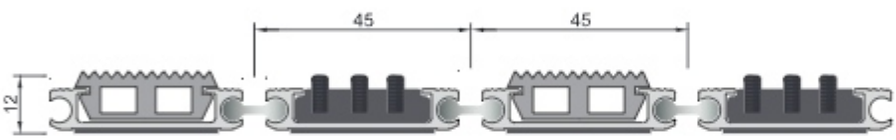


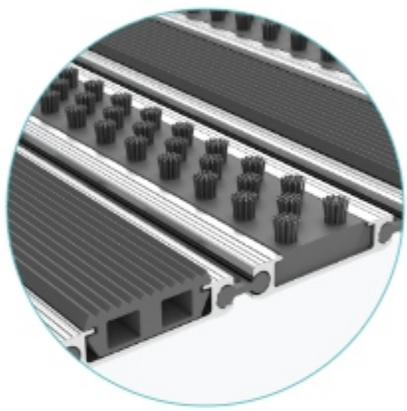

**T08 Thin Series Mat System with Rubber Roving and Cassette Brush**
It is a durable and long-lasting mat system used in areas where mud and dirt are intense.

## T09

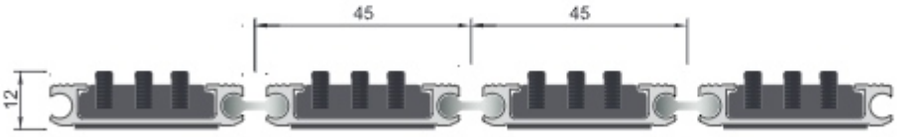

**T09 Cassette Only Brush Mat System**
They are outdoor matting systems that are resistant to heavy pedestrian traffic, can hold dirt and mud at a high rate due to their decorative and long-lasting cassette brushes.

**FLYMAT 008**
STANDARD SERIES FRAME PROFILE

**FLYMAT 022**
THIN SERIES FRAME PROFILE

**FLYMAT 026**
STANDARD SERIES FLUSH TYPE POOL SIDE PROFILE

**FLYMAT 027**
THIN SERIES FLUSH TYPE POOL SIDE PROFILE

**MB2515**
TOP TYPE POOL SIDE PROFILE

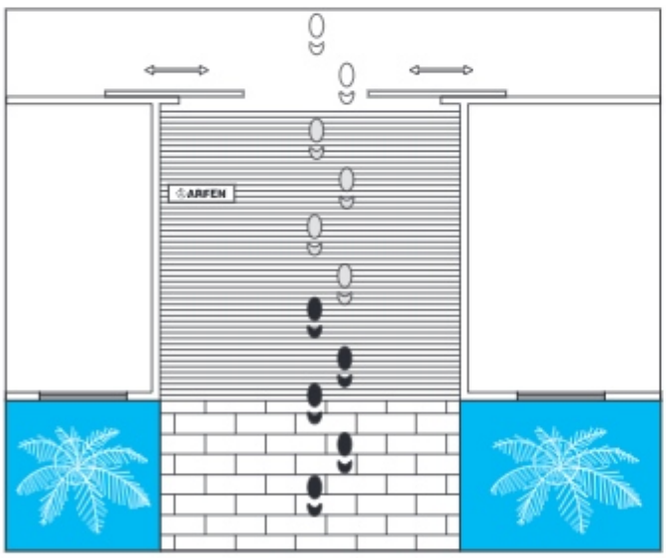


For Custom Size When Ordering

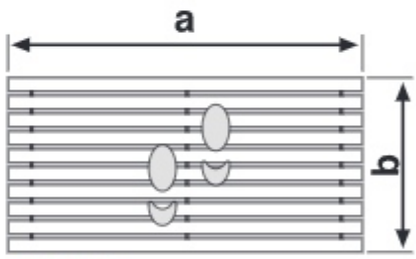


a: Mat width
b: Walking area size

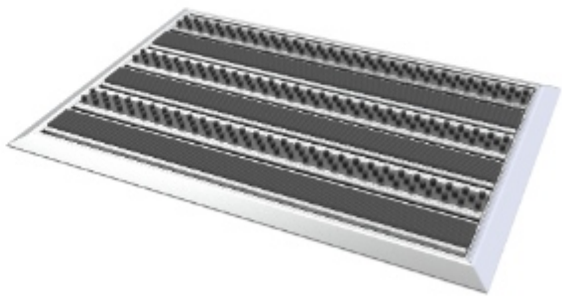

**Order Type Selection**

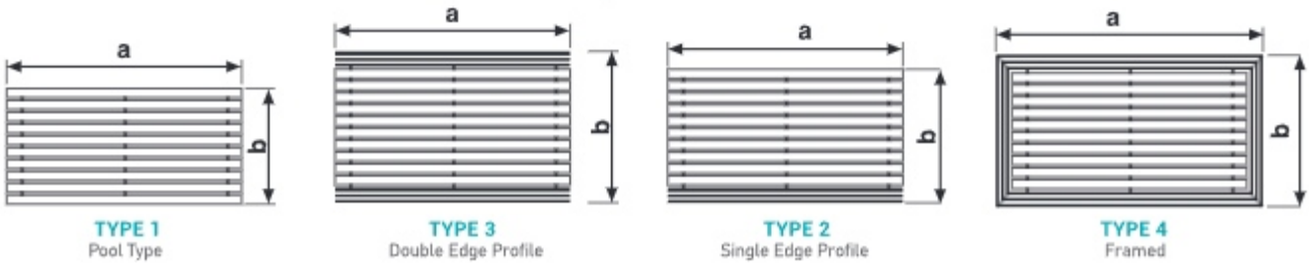


**TYPE 1**
Pool Type

**TYPE 3**
Double Edge Profile

**TYPE 2**
Single Edge Profile

**TYPE 4**
Framed

**1. Zone: Coarse Dirt Zone:**
The first coarse dirt is cleaned with the help of a rubber and brush mat. These mats are suitable for outdoors.

**2.Zone: Fine Dirt Zone:**
Fine dirt is cleaned with the help of a rubber and brush mat. These mats are suitable for indoor and outdoors.

**3. Zone: Humidity Zone:**
Remaining dirt and moisture are cleaned with the help of carpet mat. Thus, footprints are prevented and a clean entrance is ensured.

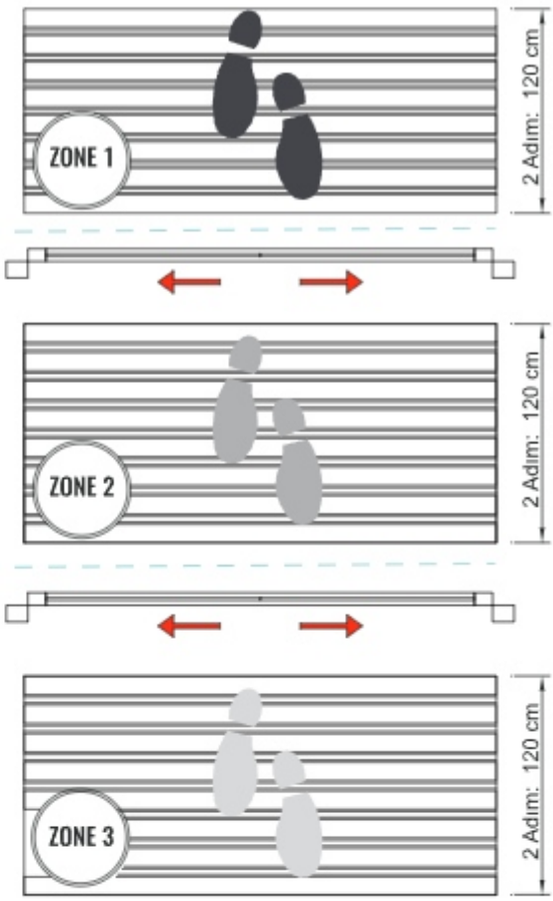


## 3-ZONE MAT SYSTEM

The first step in maintaining hygiene in public areas is through mats. Mats that keep our spaces free of dirt and grime, while creating clean areas of use, also provide the opportunity to use adjacent floor coverings for a longer period of time. Arfen's 3-Zone Mop System brings together the right parts and turns into a solution where perfect harmony is achieved. In this system, the longer the walking zone, the higher the cleaning rate. With the six-step rule at the entrance, it reduces dirt and dust up to 90% and positively affects cleaning costs. With its non-slip feature, it prevents accidents and absorbs sound.
Due to the profile and color options that are compatible with the existing architecture, many architectural and technical details have resulted in success, and we, as Arfen, continue to produce solutions in special projects.

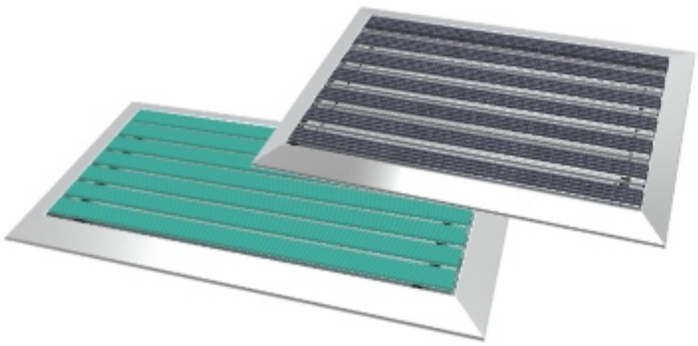

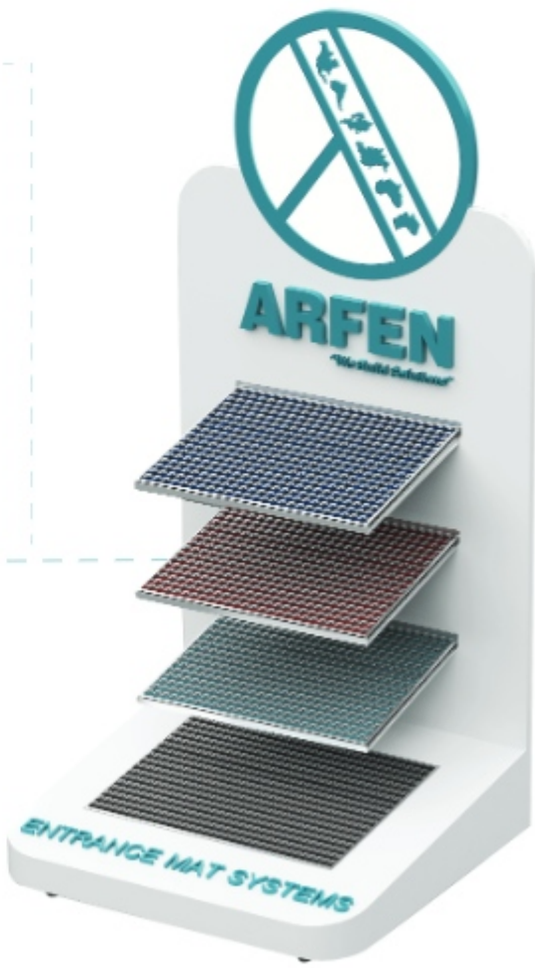

# ARFEN DEHUMIDIFIER MAT SYSTEMS

It has the feature of keeping the dust and moisture on the feet indoors. It does not leak water to the bottom. It has a PVC base that prevents the product from slipping and protects the floor from dirt.

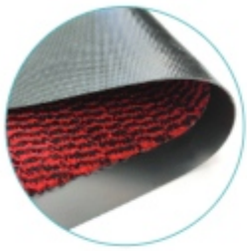

## Leila 42

| Product Code | a (Mat Width) | b (Step Distance) |
|---|---|---|
| Leila 42 Red | 60 cm | 40 cm |

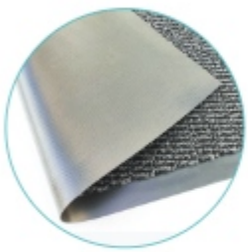

## Leila 51

| Product Code | a (Mat Width) | b (Step Distance) |
|---|---|---|
| Leila 51 Grey | 60 cm | 40 cm |
| Leila 51 Grey | 90 cm | 60 cm |
| Leila 51 Grey | 150 cm | 90 cm |
| Leila 51 Grey | 120 cm | Desired Length |

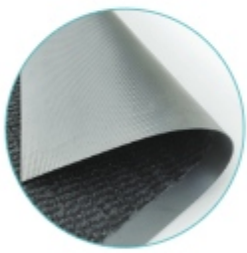

## Leila 55

| Product Code | a (Mat Width) | b (Step Distance) |
|---|---|---|
| Leila 55 Black | 60 cm | 40 cm |
| Leila 55 Black | 90 cm | 60 cm |
| Leila 55 Black | 150 cm | 90 cm |

## Arco 55

| Product Code | a (Mat Width) | b (Step Distance) |
|---|---|---|
| Arco 55 Anthracite | 90 cm | 60 cm |
| Arco 55 Anthracite | 150 cm | 90 cm |

## Granati 40 & Granati 50

| Product Code | a (Mat Width) | b (Step Distance) |
|---|---|---|
| Granati 40 | 200 cm | Desired Length |
| Granati 50 | 200 cm | Desired Length |

## EXAMPLES OF **APPLICATIONS**

ARFEN®

www.arfen.com

# ALUMINIUM & PVC SKIRTINGS

ARFEN

ALUMINIUM & PVC SKIRTINGS

# FLAT SURFACE RADIUS
# ALUMINIUM SKIRTING BOARDS

50, 60, 80, 100, 120, 150 mm high aluminium baseboards that can be applied by adhering or tightening. ASP 82-92-100-120 Series have right, left, end and inner outer corner elements. It is produced from aluminium.

**ASP 100 FINISHING ELEMENTS**

| ASP10 | ASP11 | ASP12 |
|---|---|---|
| Right End & OutsideCorner | Left End & Outside Corner | Inner Corner |

It is produced from aluminium. It is painted in the desired colour.

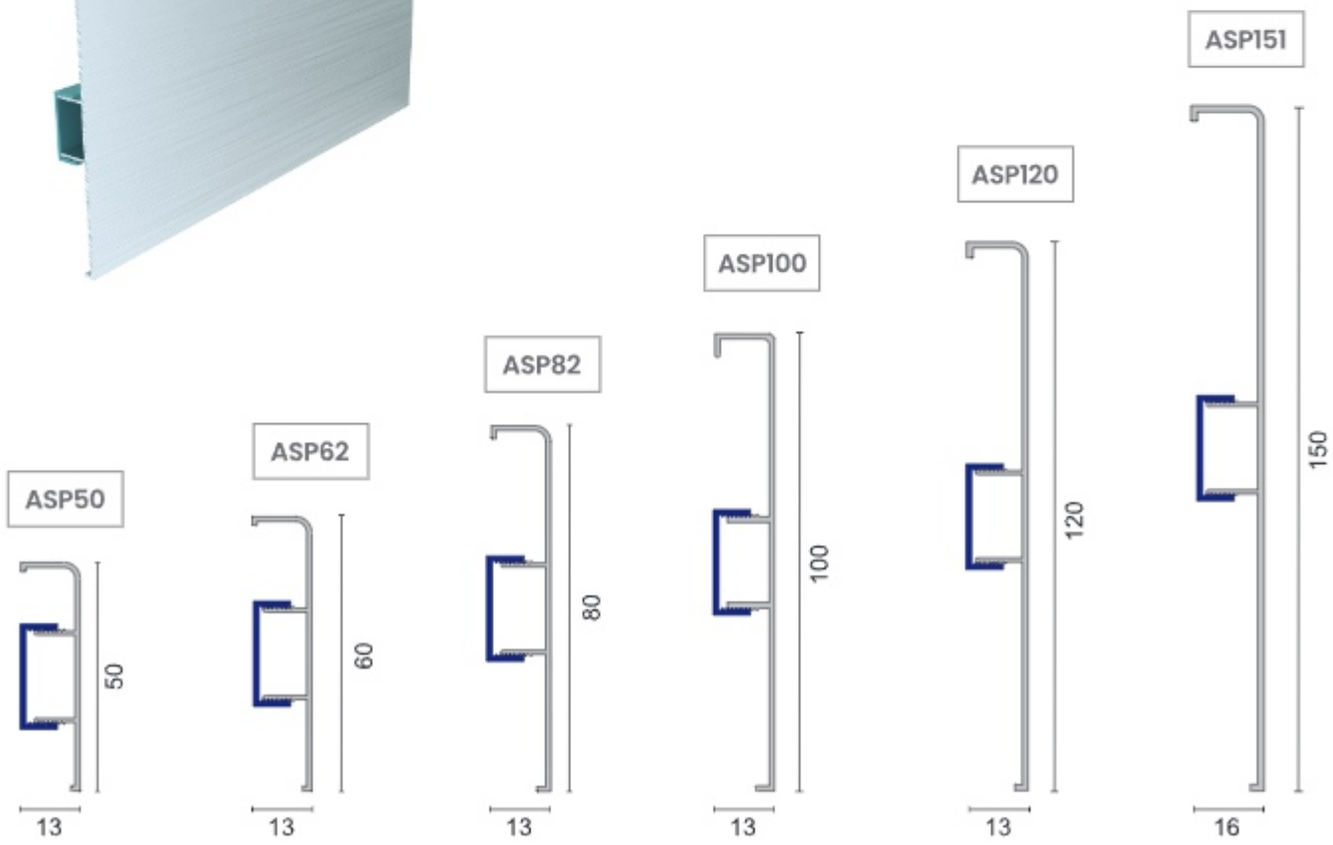


Each product has right, left, inner and outer corners made of aluminum.

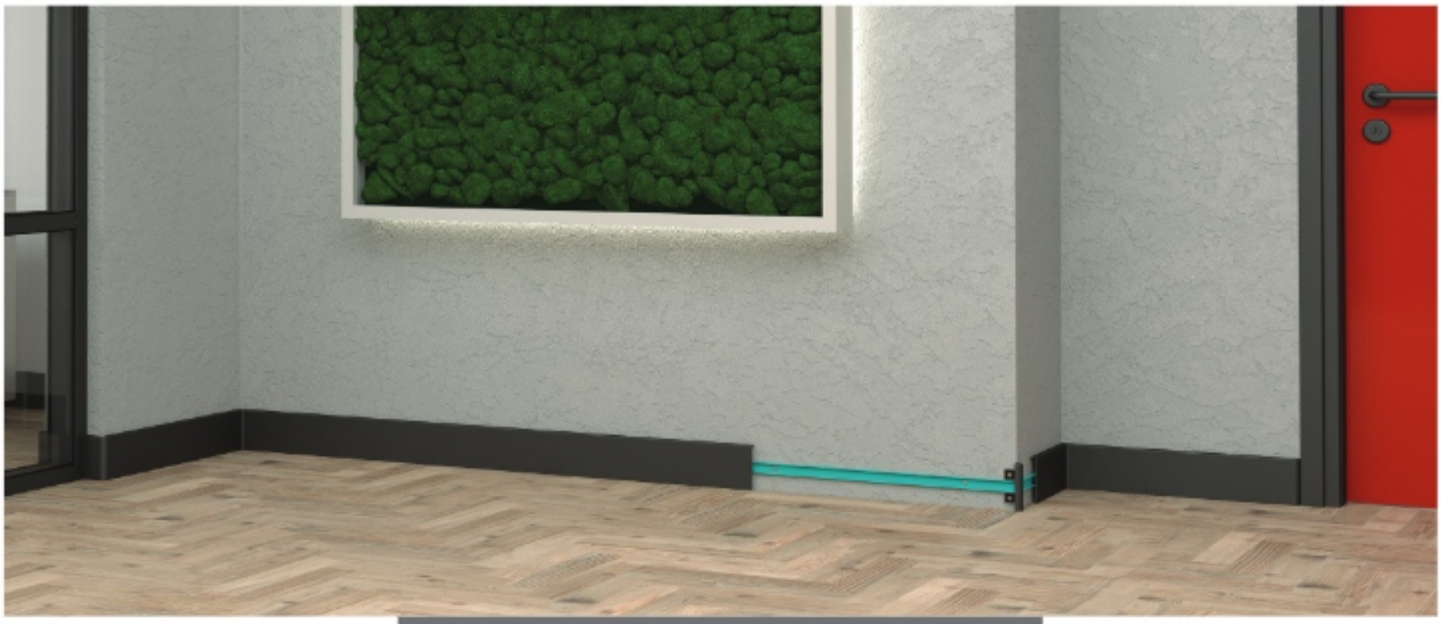

## IMPLEMENTATION **STEPS**

1 A mounting template is made with the plastic mounting apparatus and small baseboard pieces. It is placed on the surface. Marking is done through the guide holes.

2 Plastic mounting apparatus is placed by paying attention to the marked holes. It is fixed to the wall with 4x40 YHB screws or staples. It is fixed to the wall

3 The baseboard, which is positioned according to the nails of the mounting apparatus, is pressed flat.

4 The assembly is completed by mounting the inner - outer corner and end parts.

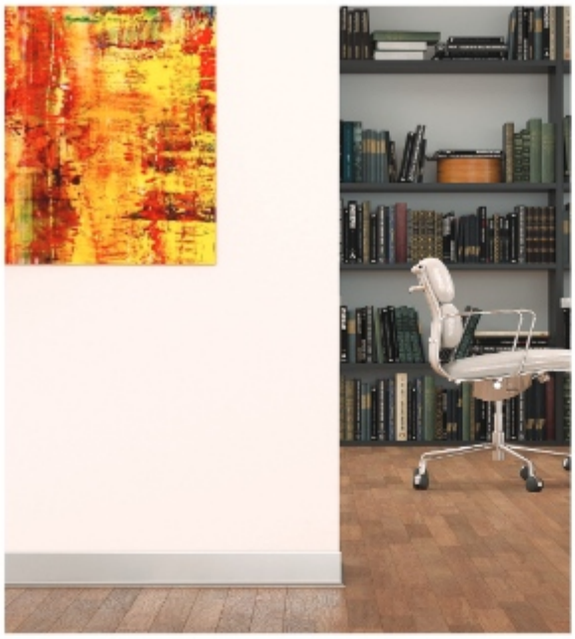

## STICK ON SCREW TYPE
## THIN SERIES SKIRTING BOARDS

They are aluminium baseboards with a height of 50,60,80,85,90 mm that can be applied with adhesive or screws.

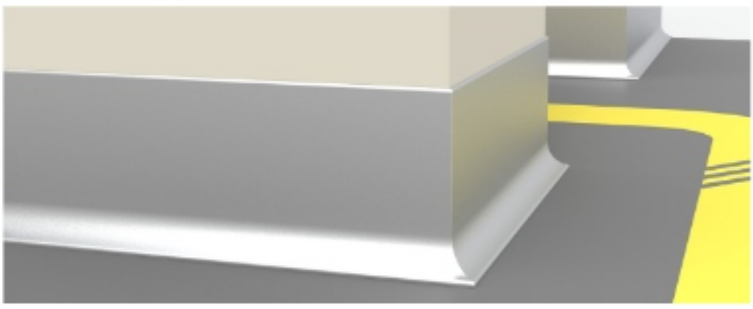

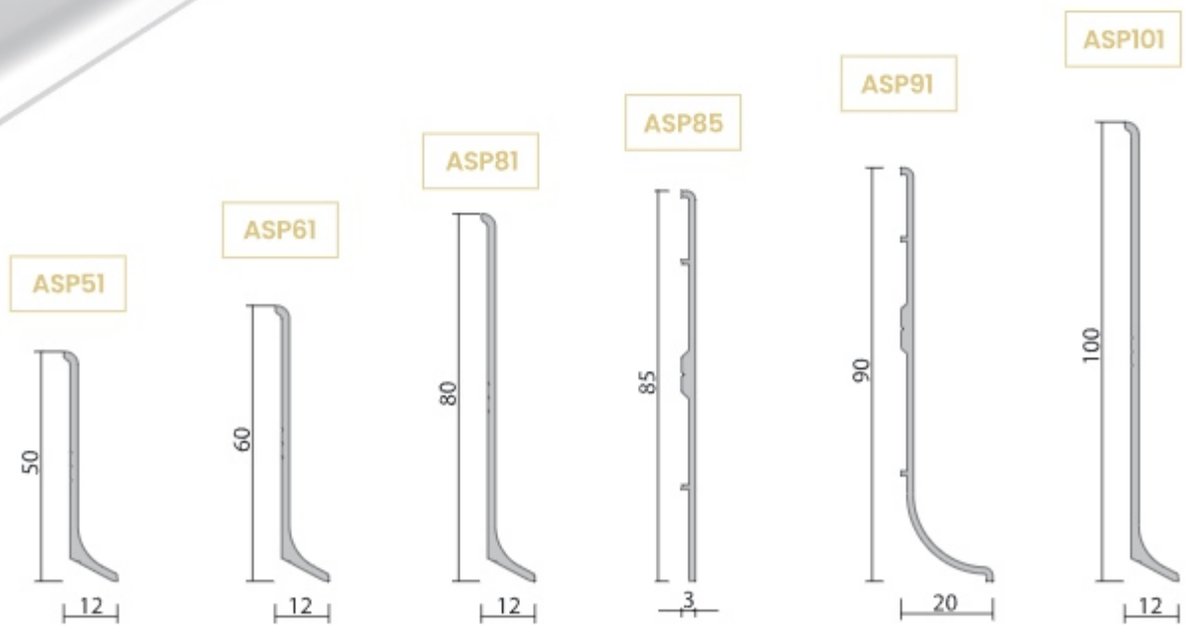

# CHAMFERED SKIRTING BOARDS

They are aluminium baseboards that can be applied with glue or screw at 60, 80, and 120 mm height. There are right-left end and inner-outer corner elements in the ASP 80 series. It is produced from PVC.

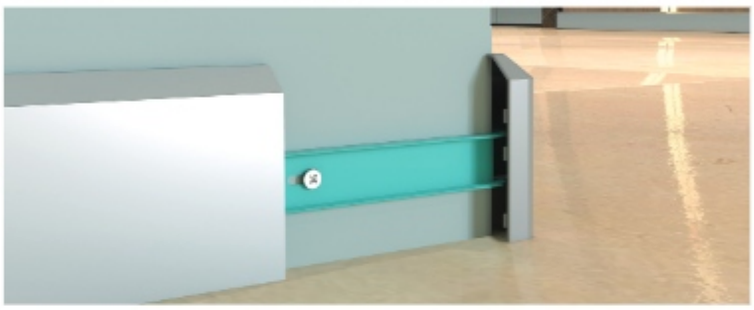

## ASP 80 FINISHING ELEMENTS

It is produced from PVC and painted in aluminum color.

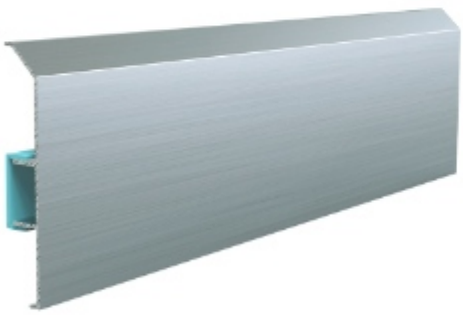

ASP60

ASP75

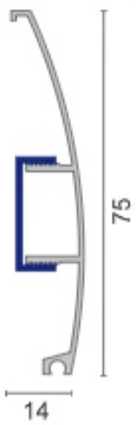


ASP80

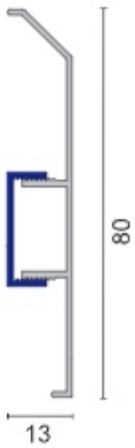


ASP121

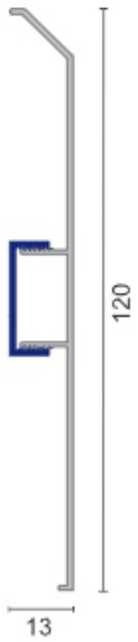

# FUGA NAIL
## SKIRTING BOARDS

They are aluminium skirting boards with a height of 70,94 mm that can be applied with adhesive or screws.

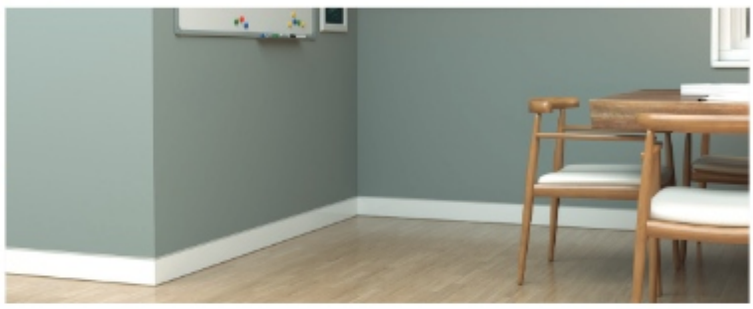

ASP71

ASP94

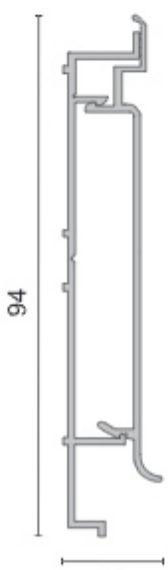


ASP 71 Aluminium is ideal for door frame applications.

# DECORATIVE
# SKIRTING BOARDS

130 mm and 150 mm height mounted with sub-carrier system removable when needed and thanks to the flexible bottom PVC insert, tolerant of minor elevation differences and and silicone-free decorative is a skirting system. Corner parts aluminum injection It can be painted with the same color electrostatic paint.

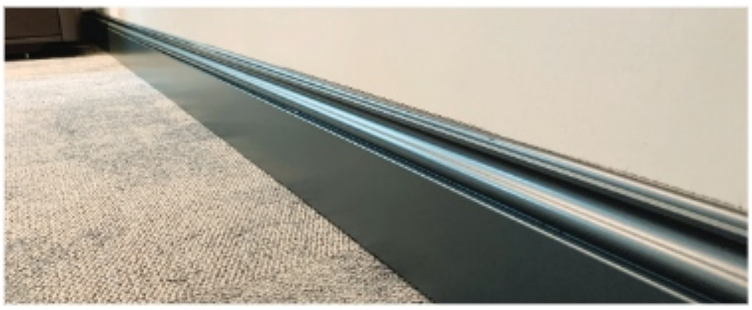

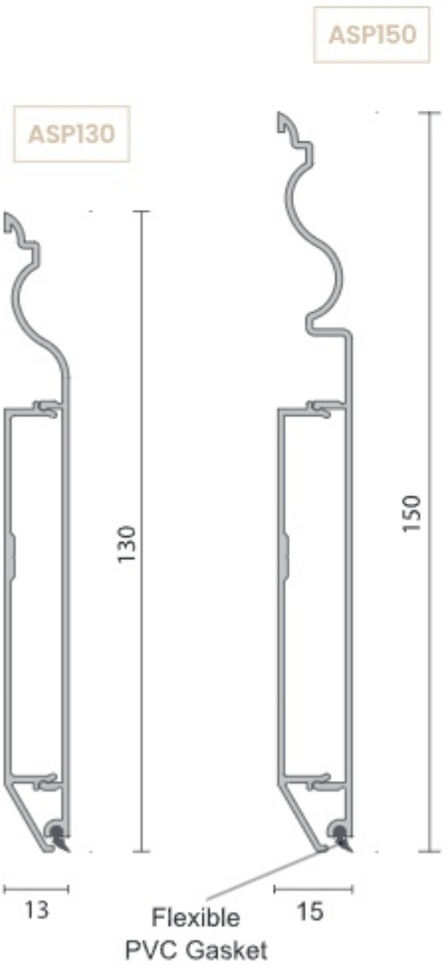

ASP150 FINISHING ELEMENTS

ASP19
outer corner

## PVC SKIRTINGS

These are PVC baseboards with a height of 45,53,80,100 mm that can be applied with adhesive or screws.

**PS45**

**PS53**

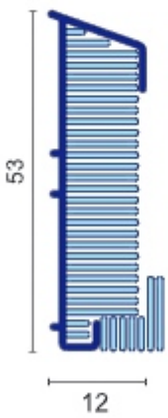


**ASP80P**

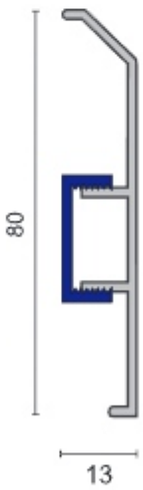


**DC101**

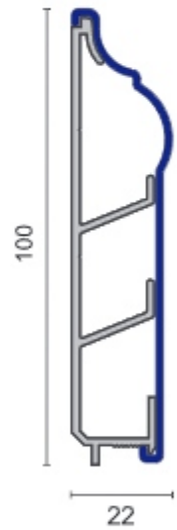

**ASP80P** FINISHING ELEMENTS

It is produced from PVC and painted in aluminium colour.

**DC101** FINISHING ELEMENTS

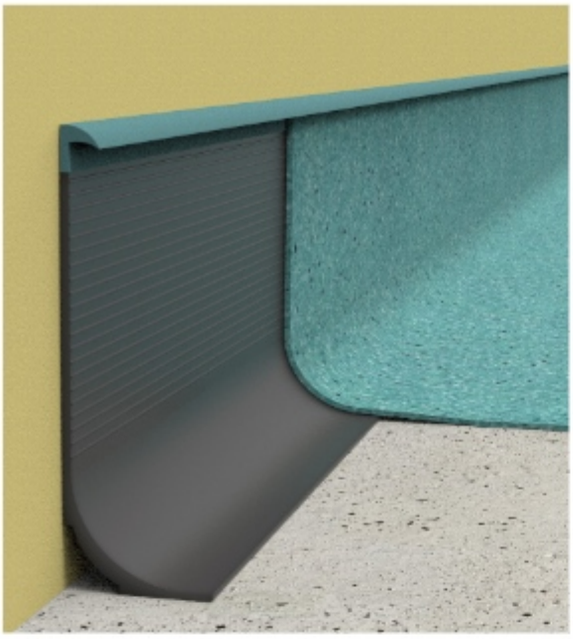

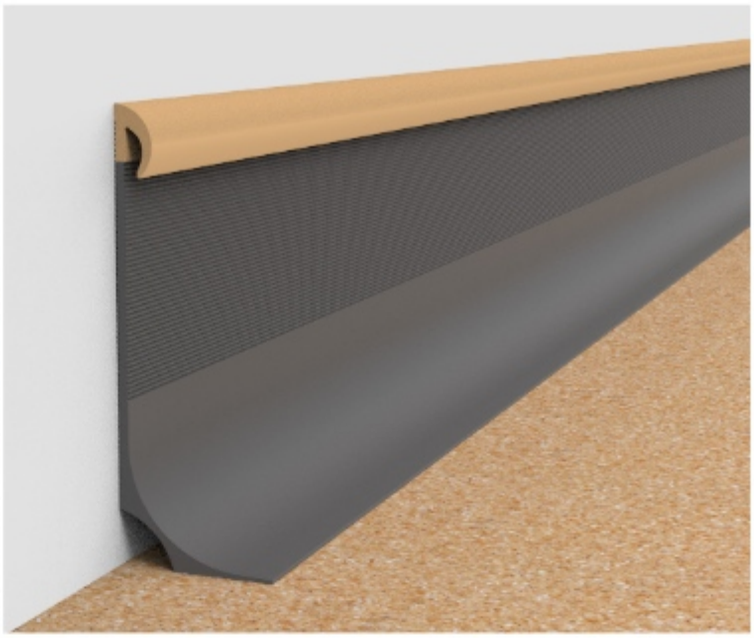

## FLEXIBLE PVC SKIRTINGS

Suitable with PVC floor coverings, decorative pvc elastic skirting. PS5510 - PS7510 and PS9010 models are compatible to epoxy floorings

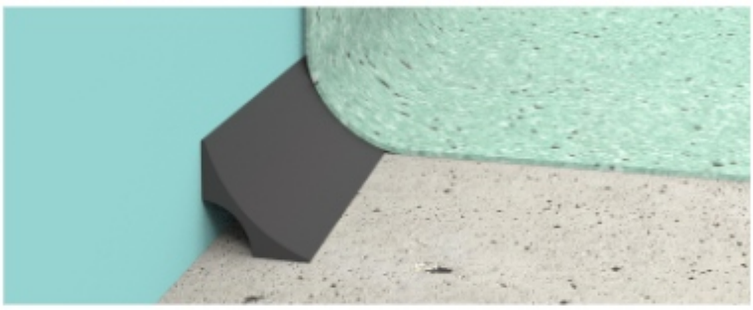

**PS 85**

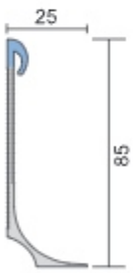


**PS 86**

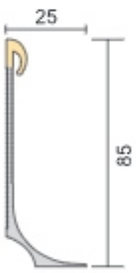


**PS 10010**

**PS 5510**

**PS 7510**

**PS 9010**

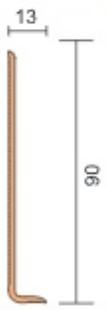


**PS 100**

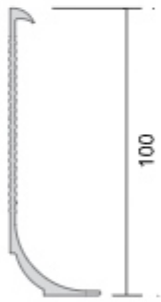


**PS 3030**
Substrate Cushion

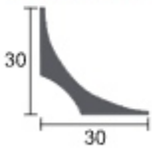


**PS 2020**
Substrate Cushion

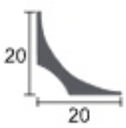

**PS0004**
Welding Cord

**PS28**
Cap Profile

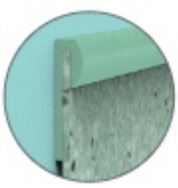

## SB 10 STAIR NOSING PROFILE

Lightweight, easy applicable and fully compatible of ceramic, granit applications decorative stair nosing profiles
Method of Application: Adhesive bonded or screw mounted
**Length :** 2,70 mt **Color:** Mat Anodised, Yellow Anodised

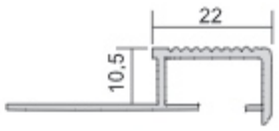


## SB 10-12 STAIR NOSING PROFILE

Lightweight, easy applicable and fully compatible of ceramic, granit applications decorative stair nosing profiles
Method of Application: Adhesive bonded or screw mounted
**Length :** 2,70 mt **Color:** Mat Anodised, Yellow Anodised

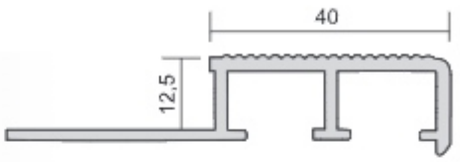


## SB 11 RUBBER INSERTED STAIR NOSING PROFILE

Lightweight, easy applicable, rubber inserted and fully compatible of ceramic, granit applications decorative stair nosing profiles
Method of Application: Adhesive bonded or screw mounted
**Length :** 2,70 mt **Rubber Insert Colors:** Black, grey, cream and brown

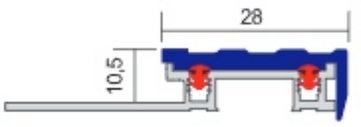

## SB 11-12 RUBBER INSERTED STAIR NOSING PROFILE

Lightweight, easy applicable, rubber inserted and fully compatible of ceramic, granit applications decorative stair nosing profiles
Method of Application: Adhesive bonded or screw mounted
**Length :** 2,70 mt **Rubber Insert Colors:** Black, grey, cream and brown

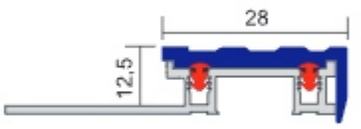

## MB 36 RUBBER INSERTED STAIR NOSING PROFILE

Lightweight, easy applicable, rubber inserted and fully compatible of ceramic, granit applications decorative stair nosing profiles
Method of Application: Adhesive bonded or screw mounted
**Length :** 2,70 mt **Color:** Mat Anodised, Yellow Anodised

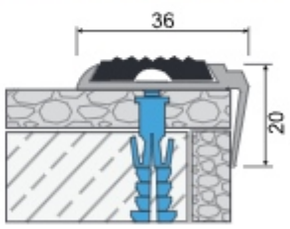

## MB 41 RUBBER INSERTED STAIR NOSING PROFILE

Lightweight, easy applicable, rubber inserted and fully compatible of ceramic, granit applications decorative stair nosing profiles
Method of Application: Adhesive bonded or screw mounted
**Length :** 2,70 mt **Color:** Mat Anodised, Yellow Anodised

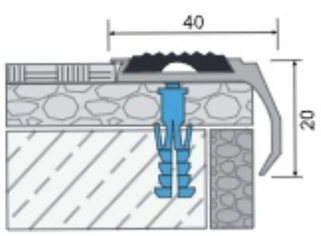

## MB 50 RUBBER INSERTED STAIR NOSING PROFILE

Lightweight, easy applicable, rubber inserted and fully compatible of carpet applications decorative stair nosing profiles
Method of Application: Adhesive bonded or screw mounted
**Length :** 2,70 mt **Color:** Mat Anodised, Yellow Anodised

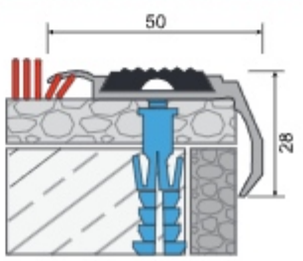

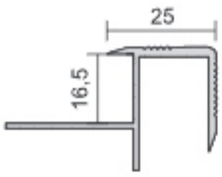


## HB 25 STAIR NOSING PROFILE

Lightweight, easy applicable, rubber inserted and fully compatible of parquet applications decorative stair nosing profiles
Method of Application: Adhesive bonded or screw mounted
**Length** : 2,70 mt **Color**: Mat Anodised, Yellow Anodised

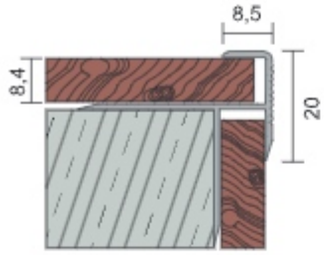


## HB 18 STAIR NOSING PROFILE

Lightweight, easy applicable, rubber inserted and fully compatible of parquet applications decorative stair nosing profiles
Method of Application: Adhesive bonded or screw mounted
**Length** : 2,70 mt **Color:** Mat Anodised, Yellow Anodised

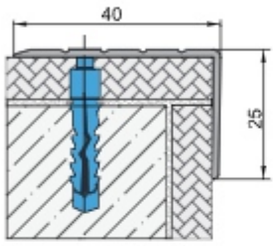


## MB 40-25 STAIR NOSING PROFILE

Lightweight, easy applicable and fully compatible of ceramic, granit applications decorative stair nosing profiles
Method of Application: Adhesive bonded or screw mounted
**Length** : 2,70 mt **Color:** Mat Anodised, Yellow Anodised

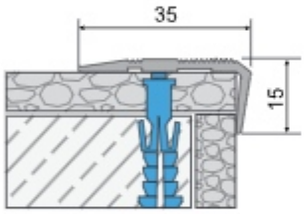


## MB 35 STAIR NOSING PROFILE

Lightweight, easy applicable and fully compatible of ceramic, granit applications decorative stair nosing profiles
Method of Application: Adhesive bonded or screw mounted
**Length** : 2,70 mt **Color:** Mat Anodised, Yellow Anodised

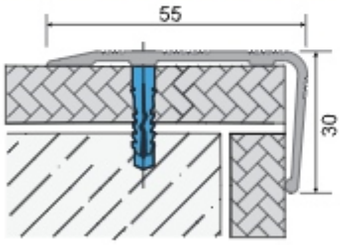


## MB 55-1 STAIR NOSING PROFILE

Lightweight, easy applicable and fully compatible of ceramic, granit applications decorative stair nosing profiles
Method of Application: Adhesive bonded or screw mounted
**Length** : 2,70 mt **Color:** Mat Anodised, Yellow Anodised

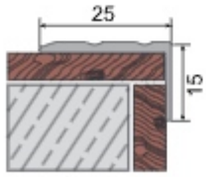


## MB 25 STAIR NOSING PROFILE

Lightweight, easy applicable and fully compatible of ceramic, granit applications decorative stair nosing profiles
Method of Application: Adhesive bonded or screw mounted
**Length** : 2,70 mt **Color:** Mat Anodised, Yellow Anodised

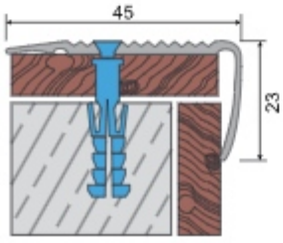


## MB 45 STAIR NOSING PROFILE

Lightweight, easy applicable and fully compatible of ceramic, granit applications decorative stair nosing profiles
Method of Application: Adhesive bonded or screw mounted
**Length** : 2,70 mt **Color:** Mat Anodised, Yellow Anodised

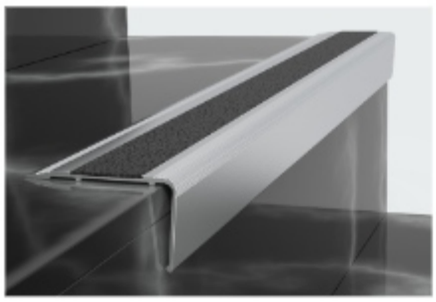

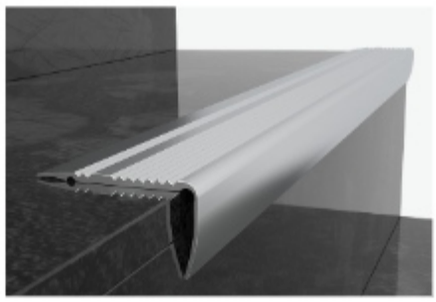

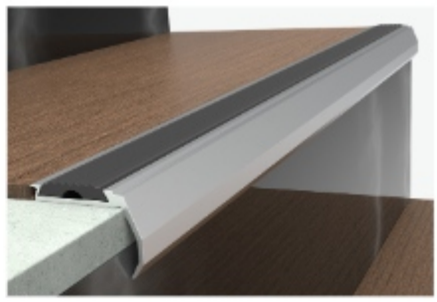

## MB 55P STAIR NOSING PROFILE

Lightweight, easy applicable and fully compatible of PVC flooring applications decorative PVC stair nosing profiles
Method of Application: Adhesive bonded
**Length** : 2,70 mt **Color:** Various Colors

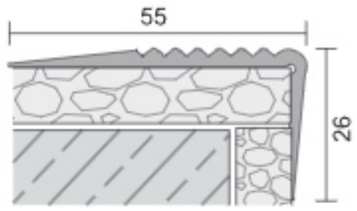


## MB 76 STAIR NOSING PROFILE

Lightweight, easy applicable and fully compatible of PVC flooring applications decorative PVC stair nosing profiles
Method of Application: Adhesive bonded
**Length** : 2,70 mt **Color:** Various Colors

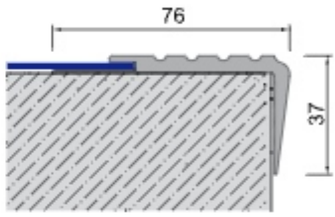


## MB 40 STAIR NOSING PROFILES WITH ANTI SLIP TAPE

Lightweight, easy applicable and fully compatible of ceramic, granit applications decorative stair nosing profiles with anti slip tape
Method of Application: Adhesive bonded or screw mounted
**Length** : 2,70 mt **Color:** Mat Anodised, Yellow Anodised

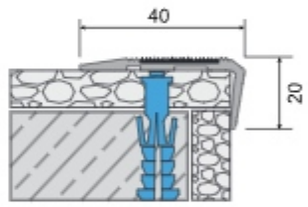


Bant Renkleri

## MB 55 STAIR NOSING PROFILES WITH ANTI SLIP TAPE

Lightweight, easy applicable and fully compatible of ceramic, granit applications decorative stair nosing profiles with anti slip tape
Method of Application: Adhesive bonded or screw mounted
**Length** : 2,70 mt **Color:** Mat Anodised, Yellow Anodised

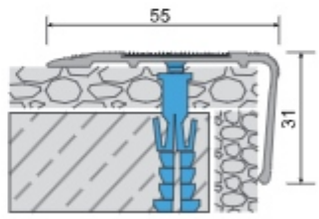


Bant Renkleri

## MB 75-2 STAIR NOSING PROFILES WITH ANTI SLIP TAPE

Lightweight, easy applicable and fully compatible of ceramic, granit applications decorative stair nosing profiles with anti slip tape
Method of Application: Adhesive bonded or screw mounted
**Length** : 2,70 mt **Color:** Mat Anodised, Yellow Anodised

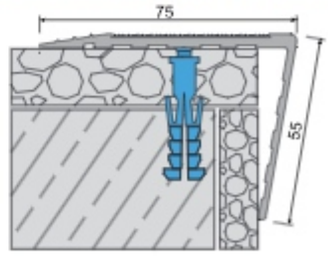


Bant Renkleri

## KB 19 - KB 25 ANTI SLIP TAPE

Self adhesive carborandum anti slip tape in 19 mm and 25 mm width
Method of Application: Adhesive bonded
**Length** : 25 mt **Color:** Black and grey

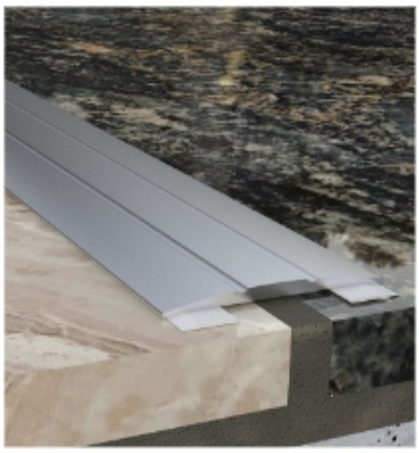

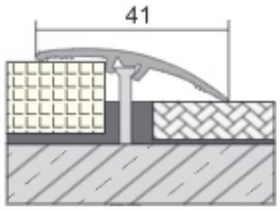


## GP 41 ELEVATION DIFFERENCE PROFILE WITH HIDDEN SCREW MOUNTED CHANNEL

Lightweight, easy applicable and fully compatible of ceramic, granit, marble, parquet applications, decorative elevation difference profiles
Method of Application: Adhesive bonded or screw mounted
**Length :** 2,70 mt **Color:** Mat Anodised, Yellow Anodised

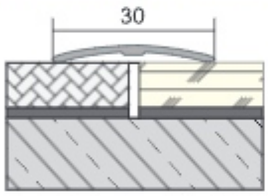


## GP 01 ELEVATION DIFFERENCE PROFILE

Lightweight, easy applicable and fully compatible of ceramic, granit, marble,parquet applications, decorative elevation difference profiles
Method of Application: Adhesive bonded
**Length :** 2,70 mt **Color:** Mat Anodised, Yellow Anodised

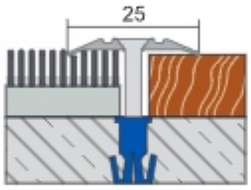


## GP 25 ELEVATION DIFFERENCE PROFILE

Lightweight, easy applicable and fully compatible of ceramic, granit, marble,parquet applications, decorative elevation difference profiles
Method of Application: Adhesive bonded or screw mounted
**Length :** 2,70 mt **Color:** Mat Anodised, Yellow Anodised

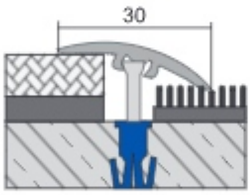


## GP 30 ELEVATION DIFFERENCE PROFILE WITH HIDDEN SCREW MOUNTED CHANNEL

Lightweight, easy applicable and fully compatible of ceramic, granit, marble,parquet applications, decorative elevation difference profiles
Method of Application: Adhesive bonded or screw mounted
**Length :** 2,70 mt **Color:** Mat Anodised, Yellow Anodised

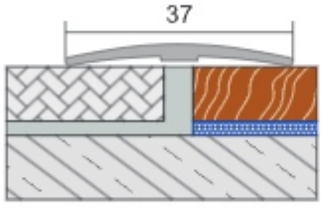


## GP 37 ELEVATION DIFFERENCE PROFILE

Lightweight, easy applicable and fully compatible of ceramic, granit, marble,parquet applications, decorative elevation difference profiles
Method of Application: Adhesive bonded
**Length :** 2,70 mt **Color:** Mat Anodised, Yellow Anodised

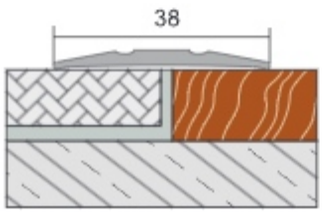


## GP 38 ELEVATION DIFFERENCE PROFILE

Lightweight, easy applicable and fully compatible of ceramic, granit, marble,parquet applications, decorative elevation difference profiles
Method of Application: Adhesive bonded or screw mounted
**Length :** 2,70 mt **Color:** Mat Anodised, Yellow Anodised

## GP 39 ELEVATION DIFFERENCE PROFILE

Lightweight, easy applicable and fully compatible of ceramic, granit, marble,parquet applications, decorative elevation difference profiles
Method of Application: Adhesive bonded
**Length :** 2,70 mt **Color:** Mat Anodised, Yellow Anodised

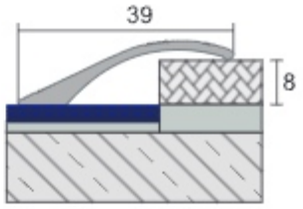


## GP 50 ELEVATION DIFFERENCE PROFILE

Lightweight, easy applicable and fully compatible of ceramic, granit, marble, parquet applications, decorative elevation difference profiles
Method of Application: Adhesive bonded or screw mounted
**Length :** 2,70 mt **Color:** Mat Anodised, Yellow Anodised

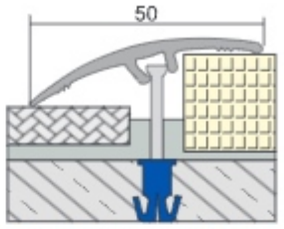


## KF 28 ELEVATION DIFFERENCE PROFILE

Lightweight, easy applicable and fully compatible of ceramic, granit, marble, parquet applications, decorative elevation difference profiles
Method of Application: Adhesive bonded or screw mounted
**Length :** 2,70 mt **Color:** Mat Anodised, Yellow Anodised

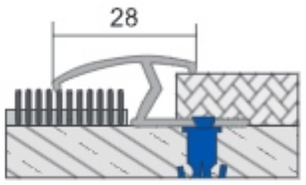


## KF 35 ELEVATION DIFFERENCE PROFILE

Lightweight, easy applicable and fully compatible of ceramic, granit, marble,parquet applications, decorative elevation difference profiles
Method of Application: Adhesive bonded
**Length :** 2,70 mt **Color:** Mat Anodised, Yellow Anodised

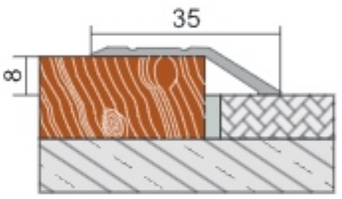


## KF 45 ELEVATION DIFFERENCE PROFILE

Lightweight, easy applicable and fully compatible of ceramic, granit, marble, parquet applications, decorative elevation difference profiles
Method of Application: Adhesive bonded or screw mounted
**Length :** 2,70 mt **Color:** Mat Anodised, Yellow Anodised

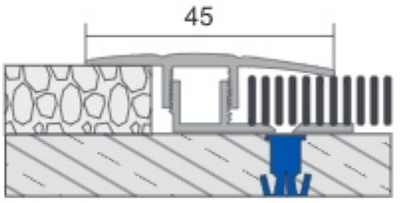


## HB 12 CARPET AND PARQUET TRIM PROFILE

Lightweight, easy applicable and fully compatible of carpet, parquet applications, decorative etrim profiles
Method of Application: Adhesive bonded or screw mounted
**Length :** 2,70 mt **Color:** Mat Anodised, Yellow Anodised

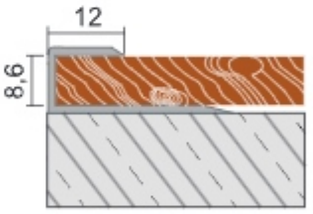


## HB 14 CARPET TRIM PROFILE

Lightweight, easy applicable and fully compatible of carpet applications, decorative trim profiles
Method of Application: Adhesive bonded or screw mounted
**Length :** 2,70 mt **Color:** Mat Anodised, Yellow Anodised

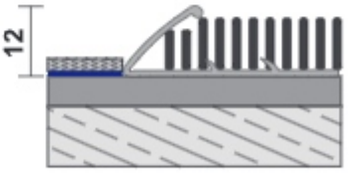


## HB 19 PARQUET TRIM PROFILE

Aluminium parquet tim profiles
Method of Application: Adhesive bonded or screw mounted
**Length :** 2,70 mt **Color:** Mat Anodised, Yellow Anodised

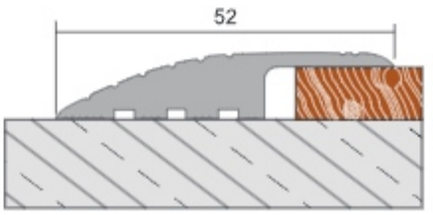

## EXTERNAL CERAMIC TRIM PROFILES

Aluminium external ceramic trim profiles
**Length:** 2,70 m
**Color:** Mat Anodised, Yellow Anodised, Polished Anodised

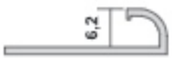


SB 0206

SB 0201

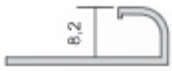


SB 02

SB 03

SB 12

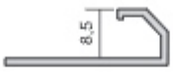


SB 04

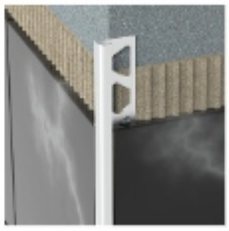

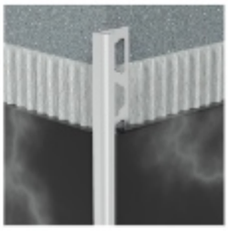

## INTERNAL CERAMIC TRIM PROFILES

Aluminium Internal Ceramic Trim Profiles
**Length:** 2,70 m
**Color:** Mat Anodised, Yellow Anodised, Polished Anodised

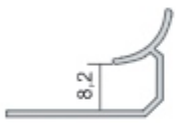


İK 08

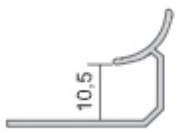


İK 10

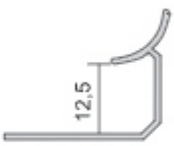


İK 12

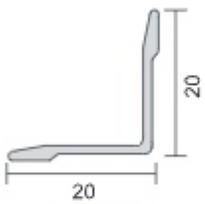


İK 20

## CERAMIC TRIM PROFILES

Aluminium ceramic trim profiles
**Length:** 2,70 m
**Color:** Mat Anodised, Yellow Anodised, Polished Anodised

SB 05

SB 06

SB 07

SB 08

SB 15

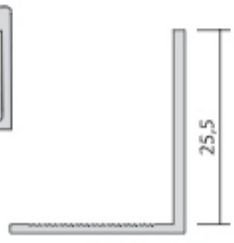


SB 07-25

SB 09

## İK 27 BATHTUB EDGE PROFILE

Lightweight, easy applicable and fully compatible of bath, kitchen applications, decorative pvc bathtub edge profiles
Method of Application : Adhesive bonded
**Length :** 2,50 - 2,70 - 3,00 mt **Color:** White

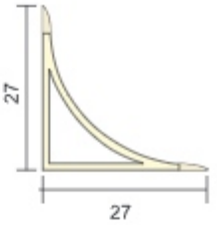


## İK 30 BATHTUB EDGE PROFILE

Lightweight, easy applicable and fully compatible of bath, kitchen applications, decorative two part pvc bathtub edge profiles
Method of Application : Adhesive bonded **Length :** 2,70 mt
**Middle Part Color:** White(PVC) and Mat or polished anodised (Aluminium)

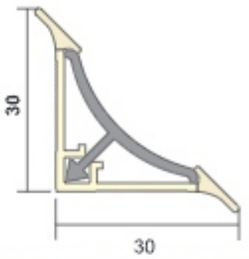


## İK 22 BATHTUB EDGE PROFILE

Lightweight, easy applicable and fully compatible of bath, kitchen applications, decorative pvc bathtub edge profiles
Method of Application : Adhesive bonded
**Length :** 2,70 mt **Color:** White

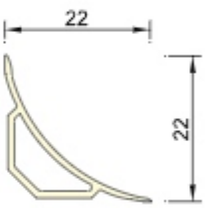


## KERB PROFILES

Lightweight, easy applicable and fully compatible of ceramic, granit, marble applications, decorative kerb profiles
Method of Application: Adhesive bonded
**Length :** 2,70 mt **Color:** Mat Anodised, Yellow Anodised, Polished Anodised

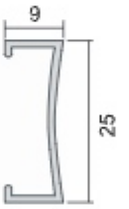


» DP 03

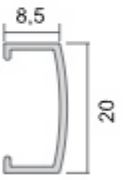


» DP 04

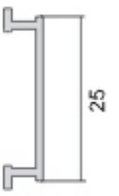


» DP 05

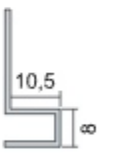


» SB 05

## TRANSITION PROFILES

Lightweight, easy applicable and fully compatible of parquet, ceramic, granit, marble applications, decorative profiles
Method of Application: Adhesive bonded
**Length :** 2,70 mt **Color:** Mat Anodised, Yellow Anodised, Polished Anodised

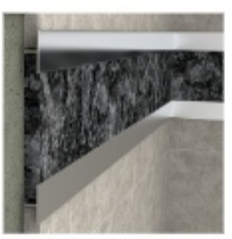

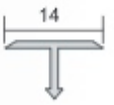


» SB 14

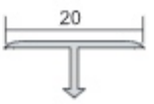


» SB 20

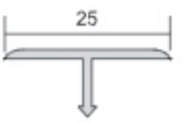


» SB 25

## TERRAZO PROFILES

Aluminium terrazo profiles
**Length:** 3 m
**Color :** Non Anodised Aluminium

### SB 53

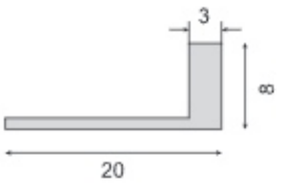


### SB 54

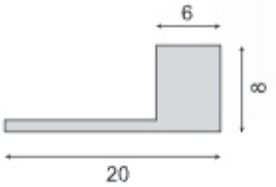

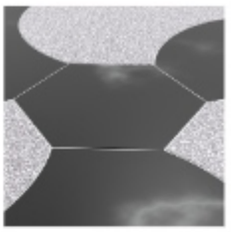

### SB 55

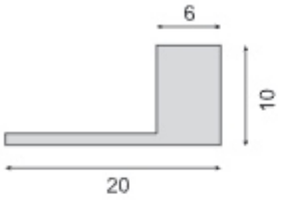


### SB 56

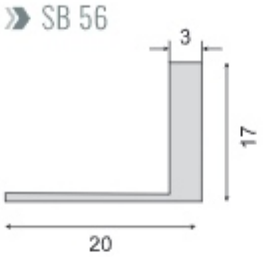


### SB 57

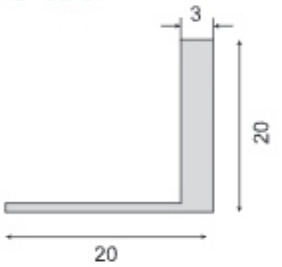


### SB 58

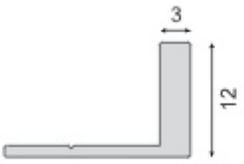


### SB 59

### SB 60

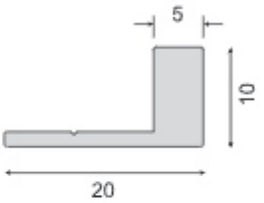


### SB 61

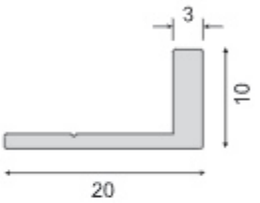


## DRYWALL FUGA PROFILES

Aluminium drywall fuga corner and trim profiles
**Length:** 3,00 m **Color: Standard production color RAL9016 and can be produced in special RAL colors**

### ARF 10

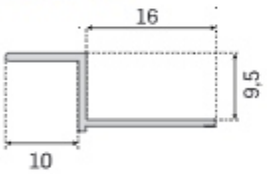


### ARF 15

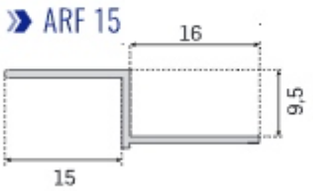

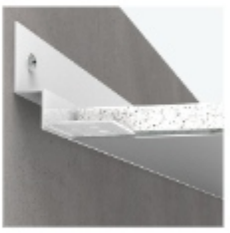

### ARF 10-1

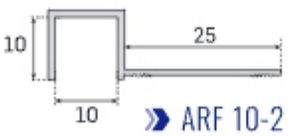


### ARF 10-2

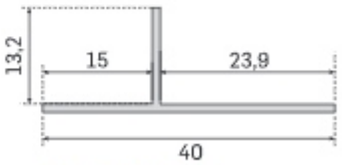


### ARF 40x15

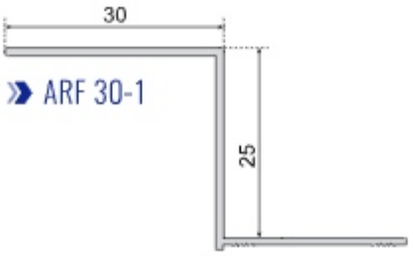


### ARF 30-1

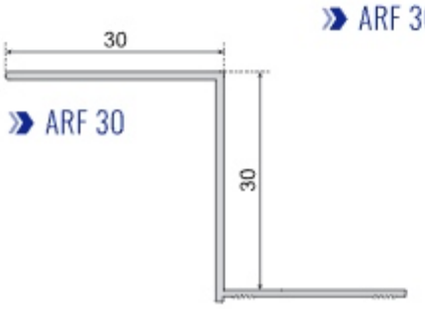


### ARF 30

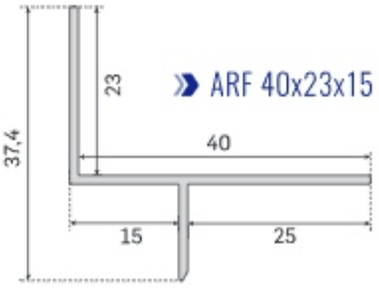


### ARF 40x23x15

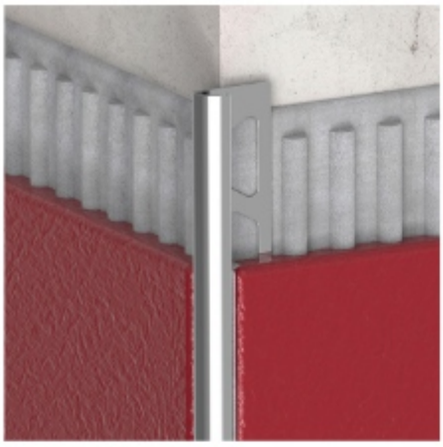

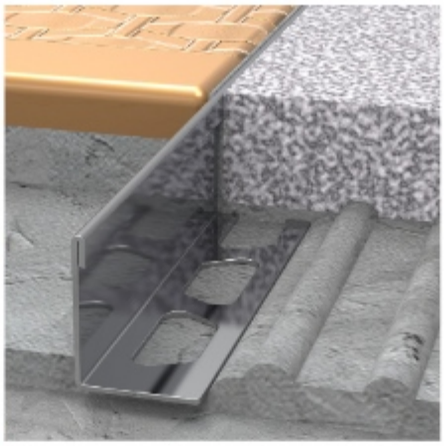

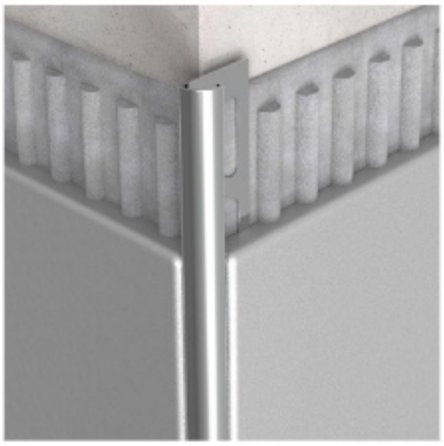

## SB03-01 10 MM STAINLESS STEEL CERAMIC CORNER PROFILE

**Length:** 2,50 m
**Color:** Satine
*Produced as 304 grade stainless steel and thickness is 0,6 mm*

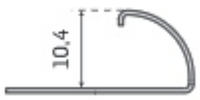


## SB12-01 12 MM STAINLESS STEEL CERAMIC CORNER PROFILE

**Length:** 2,50 m
**Color:** Satine
*Produced as 304 grade stainless steel and thickness is 0,6 mm*

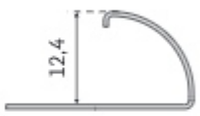


## SB05-01 STAINLESS STEEL CERAMIC CORNER PROFILE

**Length:** 2,50 m
**Color:** Satine
*Produced as 304 grade stainless steel and thickness is 0,6 mm*

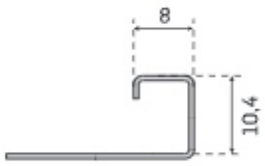


## SB07-01 10 MM STAINLESS STEEL CERAMIC TRIM PROFILE

**Length:** 2,50 m
**Color:** Satine
*Produced as 304 grade stainless steel and thickness is 0,6 mm*

## SB08-01 12 MM STAINLESS STEEL CERAMIC TRIM PROFILE

**Length:** 2,50 m
**Color:** Satine
*Produced as 304 grade stainless steel and thickness is 0,6 mm*

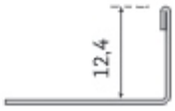

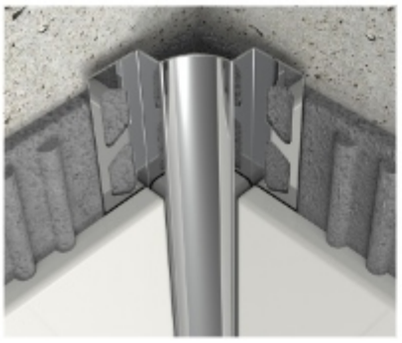

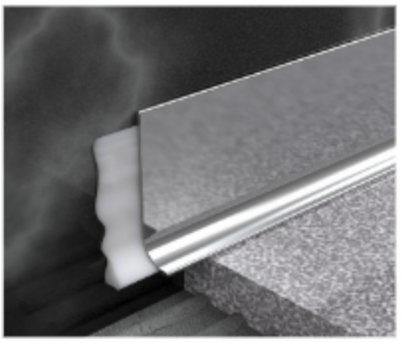

## SB08-20 20 MM STAINLESS STEEL CERAMIC TRIM PROFILE

**Length:** 2,50 m
**Color:** Satine
*Produced as 304 grade stainless steel and thickness is 0,6 mm*

## DP05-01 23 MM STAINLESS STEEL FUGA PROFILE

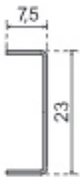


**Length:** 2,50 m
**Color:** Satine
*Produced as 304 grade stainless steel and thickness is 0,6 mm*

## ASP60-01 STAINLESS STEEL SKIRTING

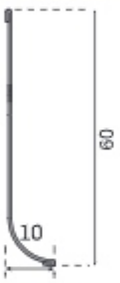


**Method of Application:** Adhesive bonded
**Length :** 2,50 mt **Color:** Satine
*Produced as 304 grade stainless steel and thickness is 0,6 mm*

## İK10-02 STAINLESS STEEL INTERNAL CORNER PROFILE

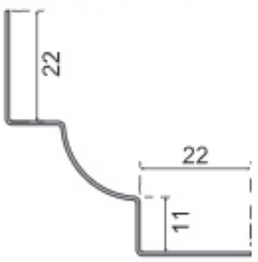


**Length :** 2,50 mt
**Color:** Satine
*Produced as 304 grade stainless steel and thickness is 0,6 mm*

## CG (30S, 50S, 75S, 100S) STAINLESS STEEL CORNER PROTECTION

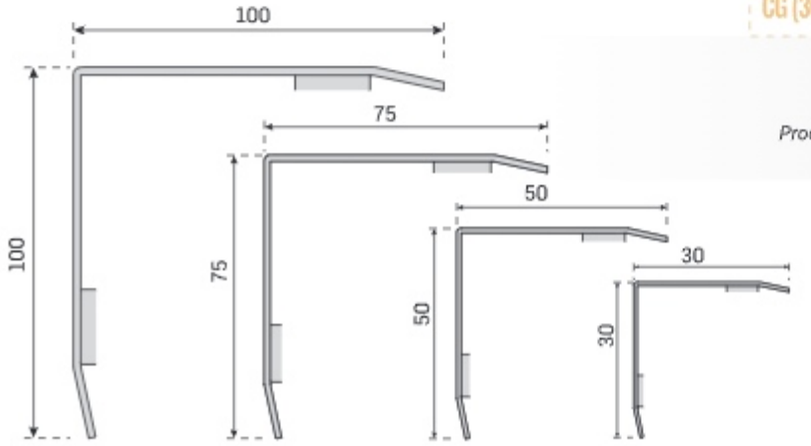


**Length :** 3,00 mt
**Color:** Satine
*Produced as 304 grade stainless steel and thickness is 1 mm*

# QUALITY **CERTIFICATES**

ZAG Fire Rope
Test Certificate

Factory Production Control
Certificate of Conformity

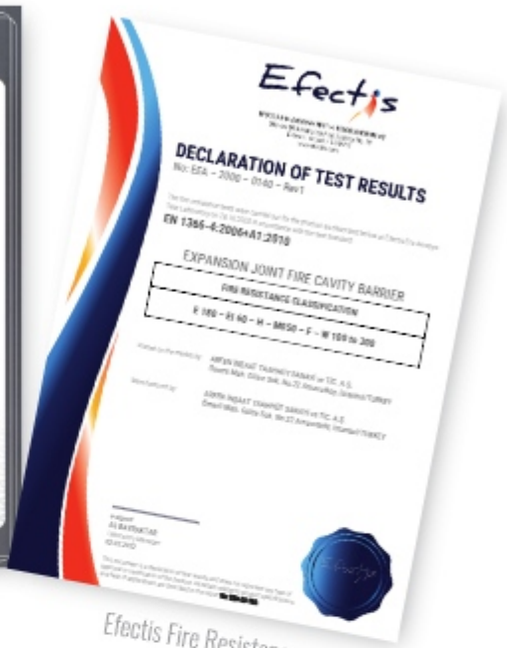


Efectis Fire Resistance
Certificate

TSE Certificate

TSE Certificate

TSE Certificate

ARFEN®

ISO 45001 Certificate

ISO 9001:2015 Certificate

ISO 14001:2015 Certificate

QUALICOAT SEASIDE Certificate

Factory Production Control Certificate

Brand Registration Certificate

BIM

Building information modeling is avaliable
**Please contact**

we build solutions



TSE CE Intertek Efectis VOC FREE

ARFEN

**ARFEN CONSTRUCTION AND BUILDING TECHNOLOGIES COMPANY**

**Head Office:** Atatürk San. Bölgesi Ömerli Mah. Hakkı İleri Cad. Gülce Sk. No:22 Hadımköy - Arnavutköy / İSTANBUL
**Tel:** +90 212 485 16 15 - **Fax:** +90 212 771 25 79 - **www.arfen.com**

**ARFEN ALUMINIUM COMPANY**

Ergene / TEKİRDAĞ - **www.arfenaluminyum.com.tr**

**ARFEN BUILDING AND BRIDGE TECHNOLOGY**

Dilovası / Kocaeli - **www.arfen.com.tr**

TURKEY